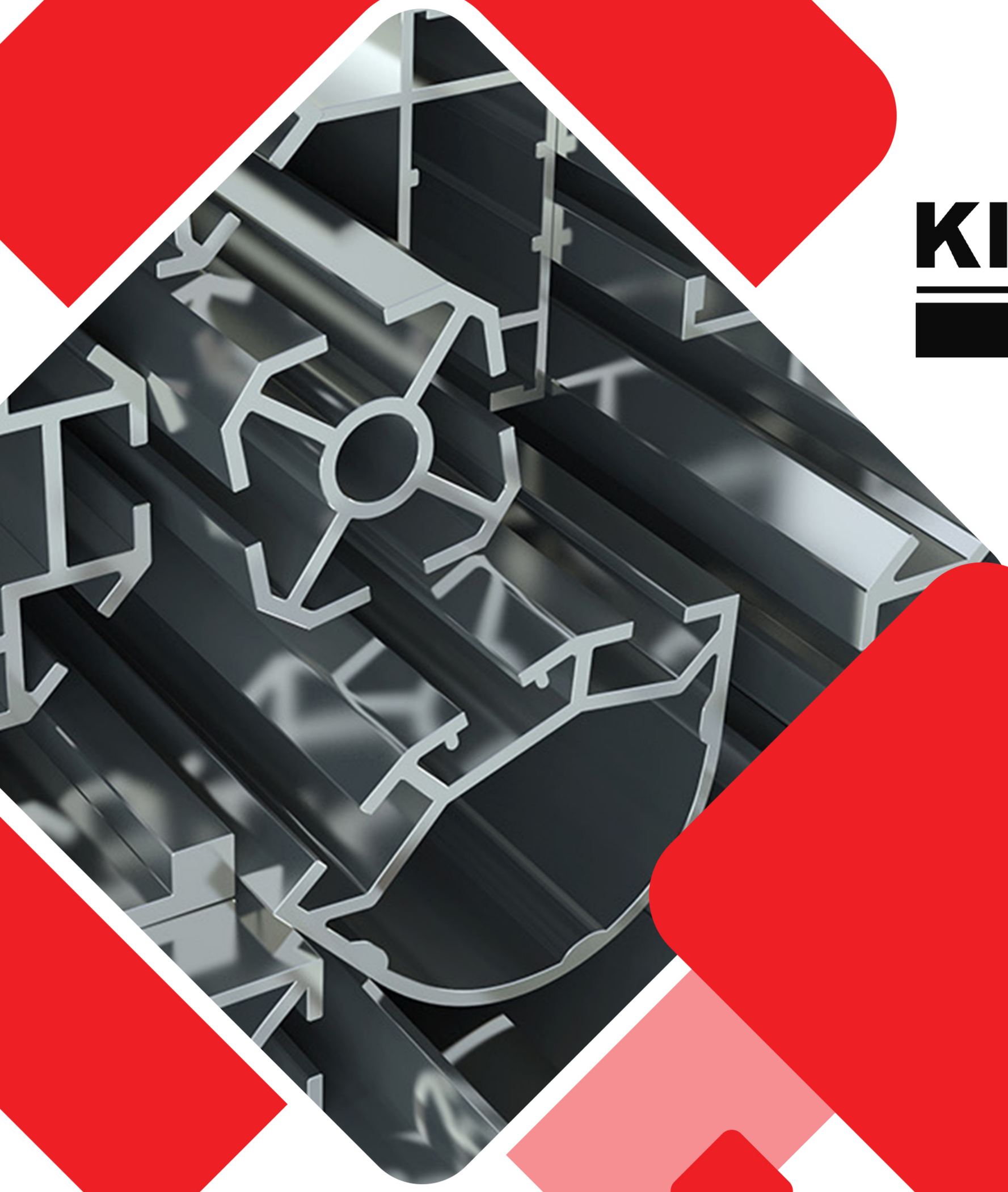

KINGDOM
DEKOR

Kingdom Dekor Aluminum

Profile Series
CATALOG




+968 98 884 336

WWW.KINGDOMDEKOR.COM

CONTENTS

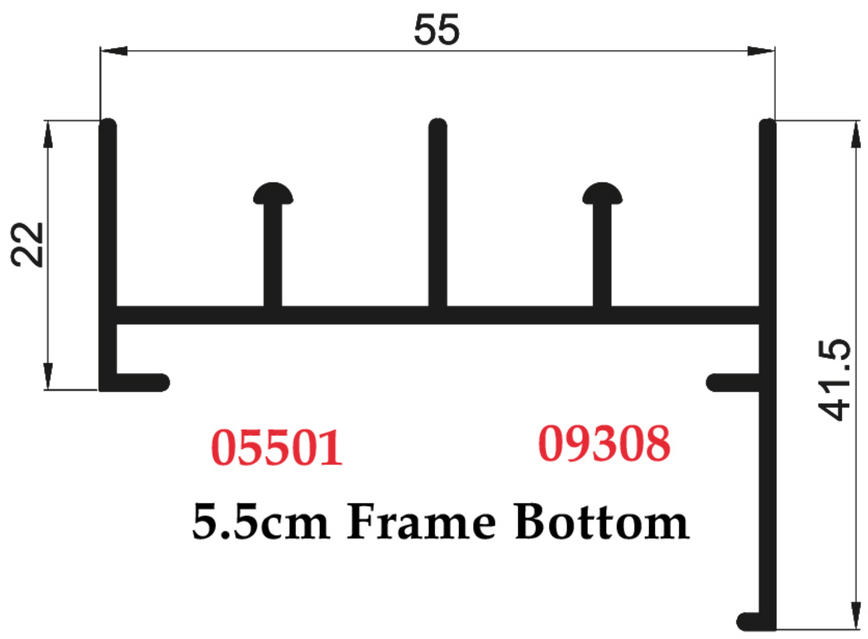

05501 09308

5.5cm Frame Bottom

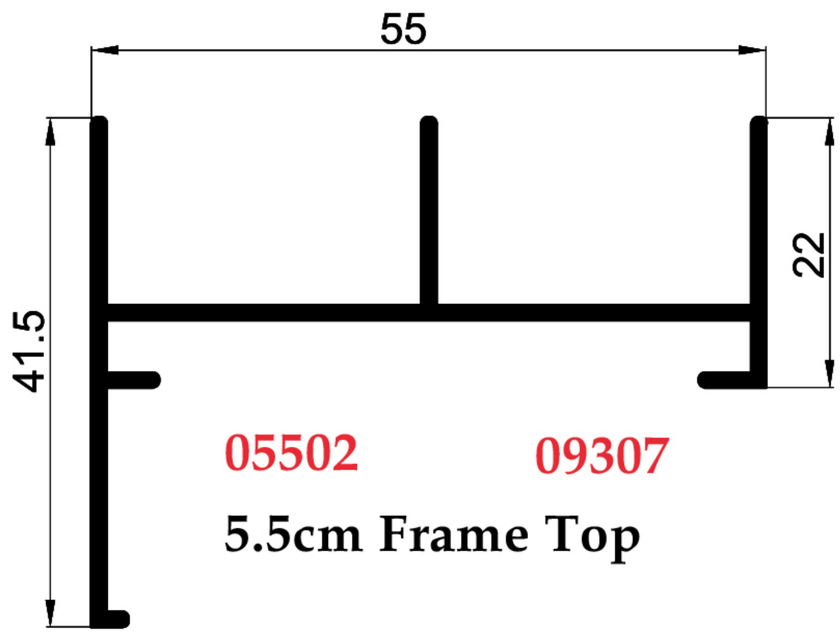

05502 09307

5.5cm Frame Top

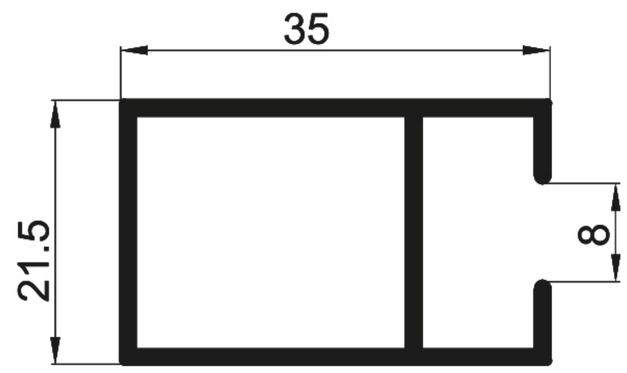

05503 12181

5.5cm C Section

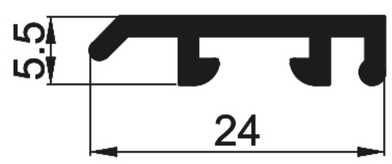

05507 09051

5.5cm Fix Fly Screen

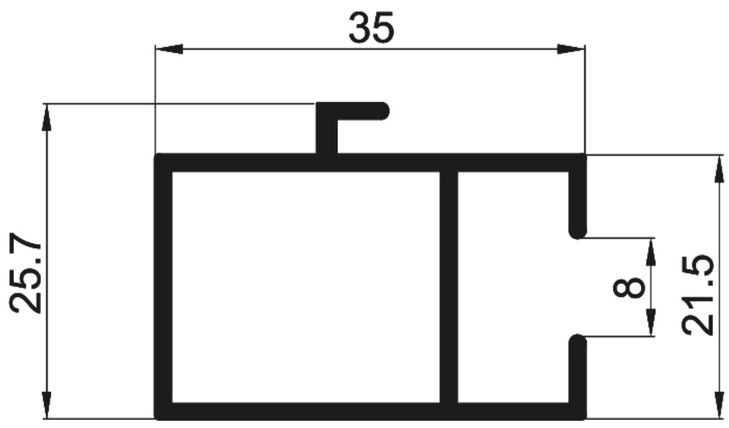

05504 12182

5.5cm Shutter Bottom

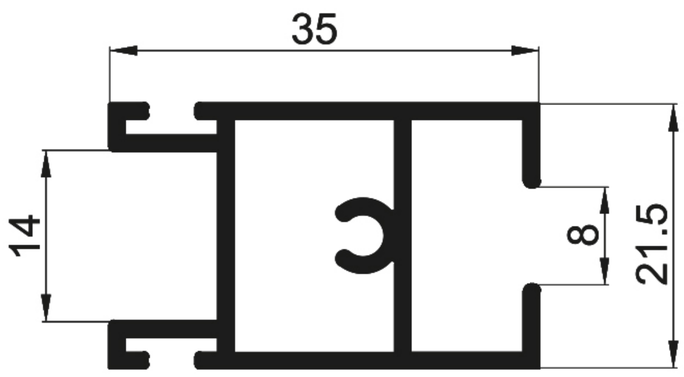

05505 12750

5.5cm Inter Lock

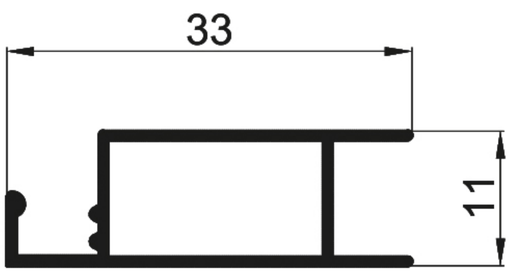

08007 12756

8cm Fly Screen

8cm Frame Bottom

08001 09679

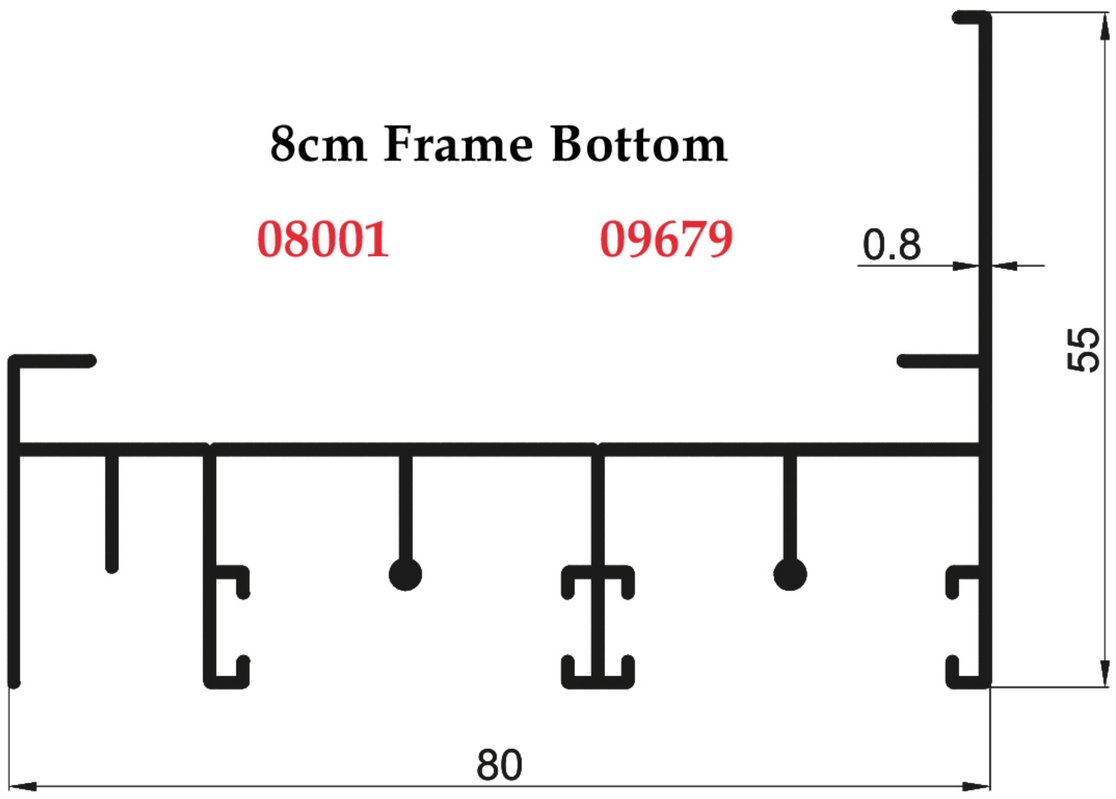

8cm Frame Top

08002 09678

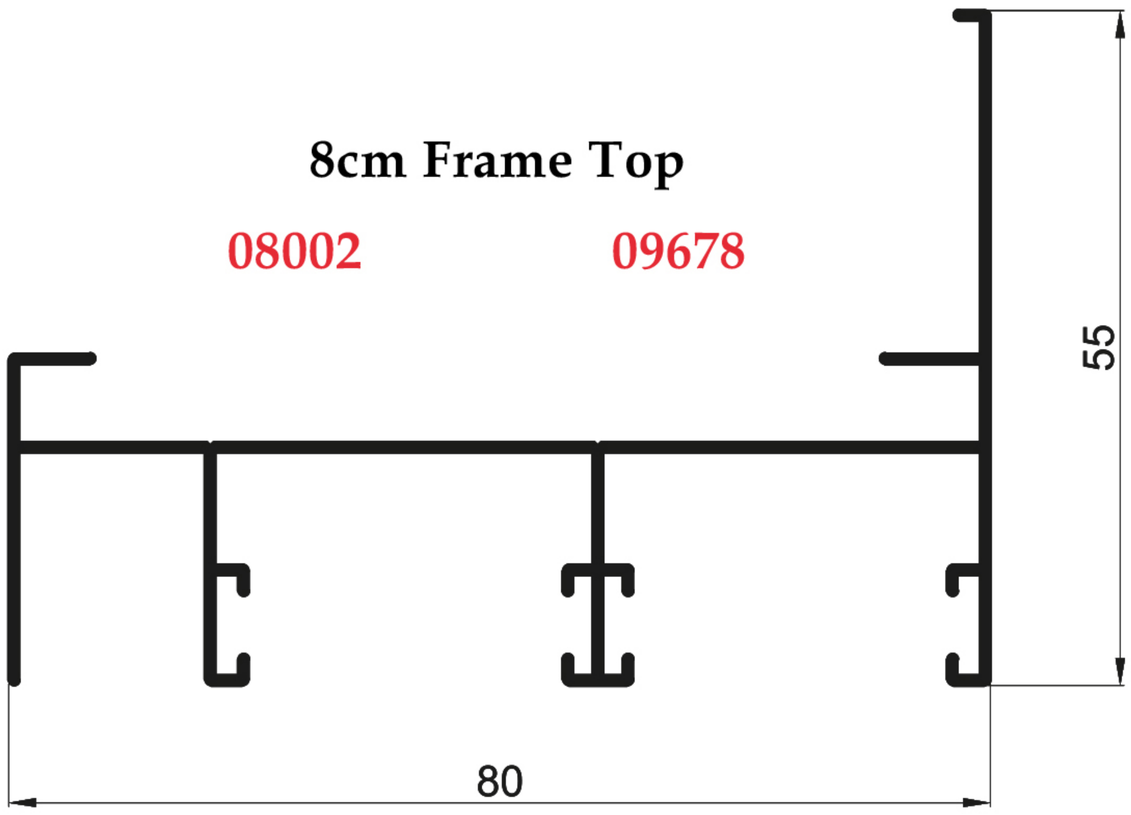

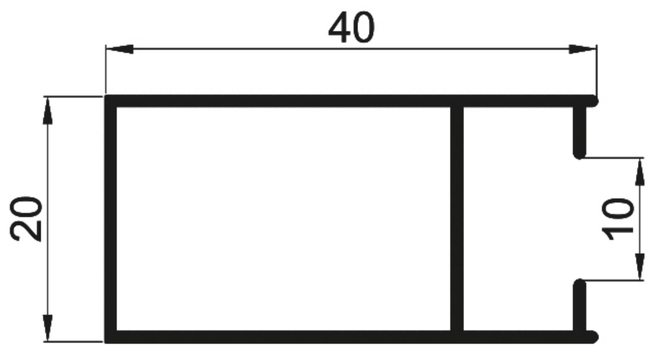

08003 12365

8cm C Section

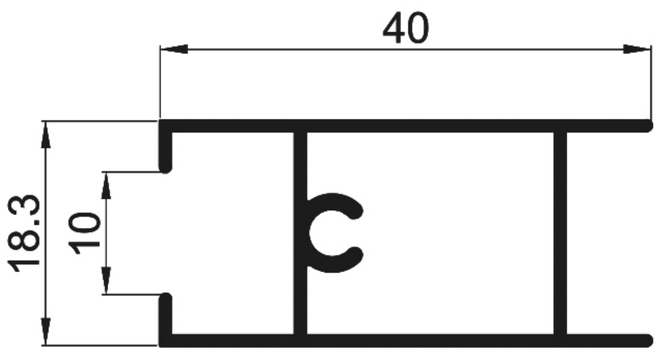

08004 12367

8cm Shutter Bottom

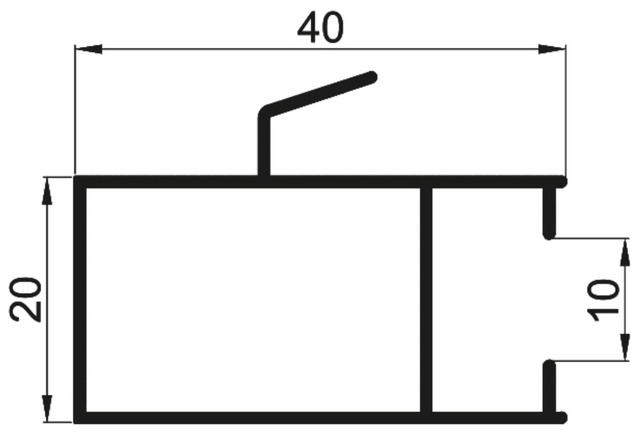

08005 12366

8cm Inter Lock

09202 09073

9.2cm Frame Top

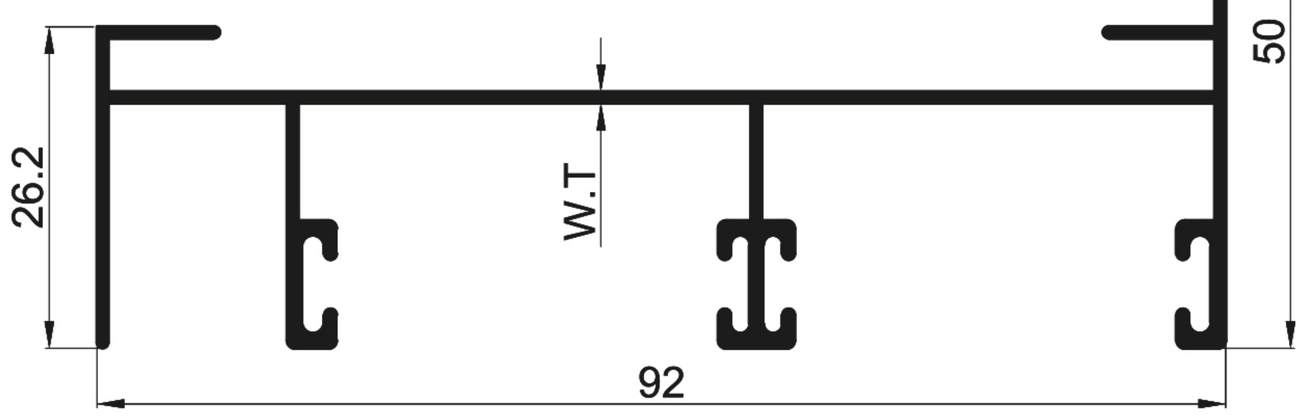

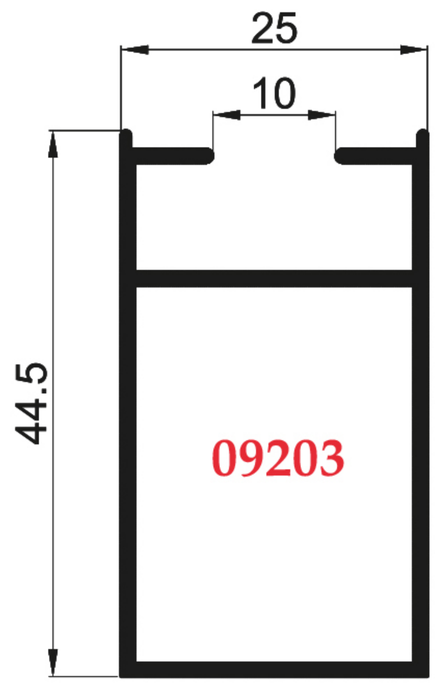

12433

9.2cm C Section

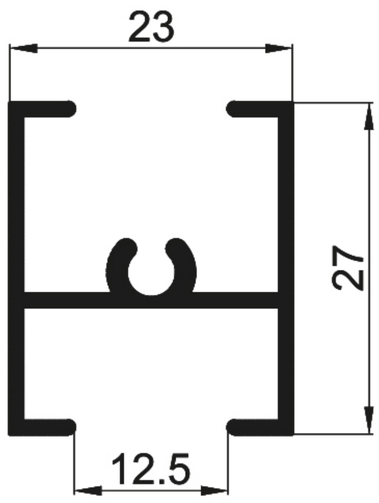

09206 10793

9.2cm Shutter Top

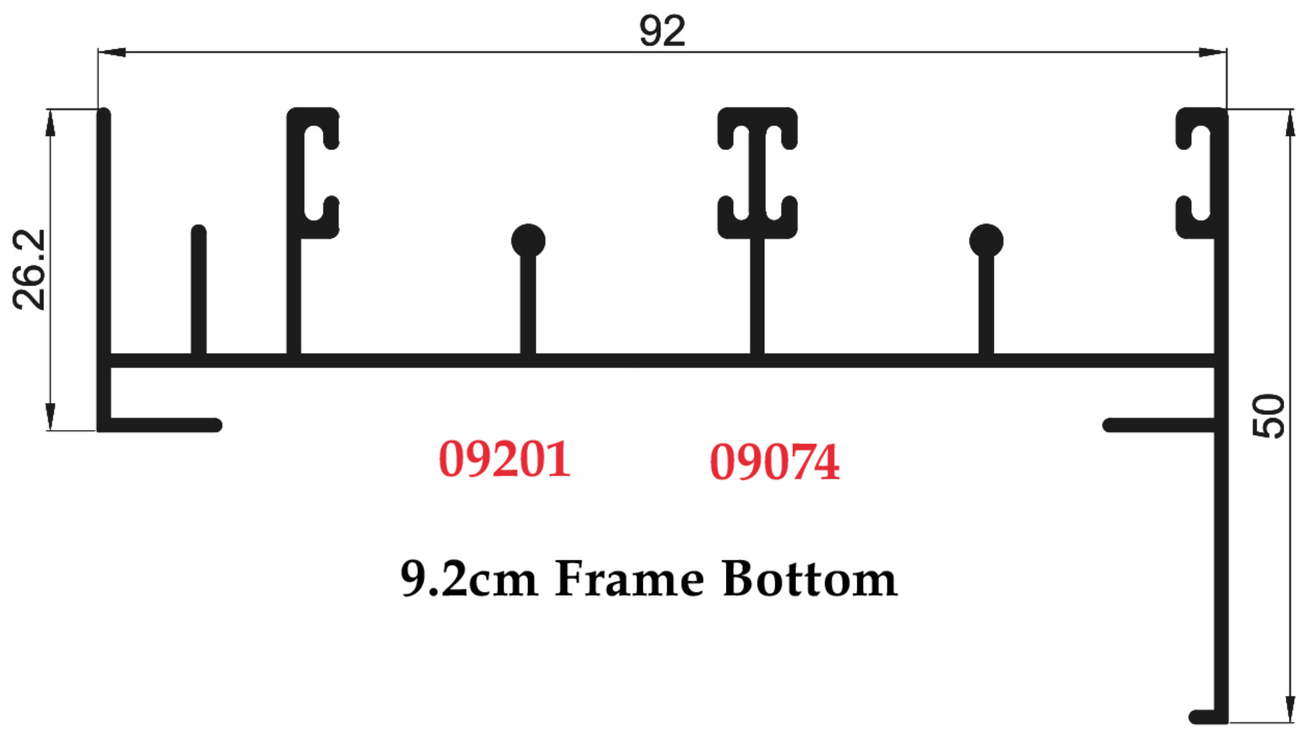

09201 09074

9.2cm Frame Bottom

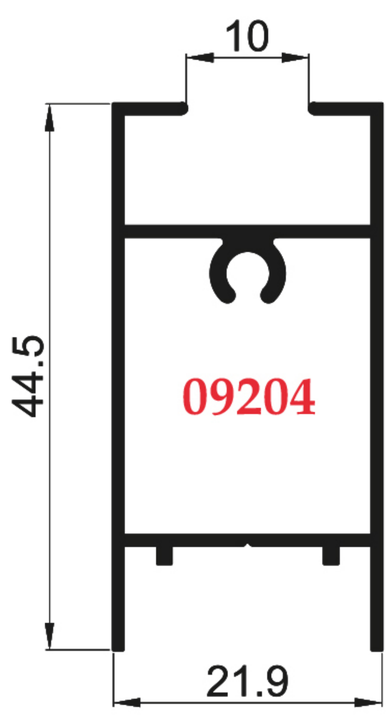

12435

9.2cm Shutter Bottom

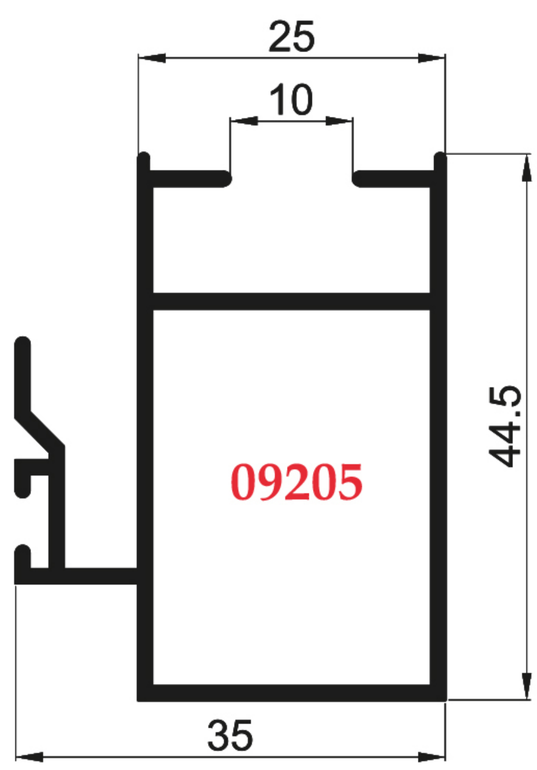

12434

9.2cm Inter Lock

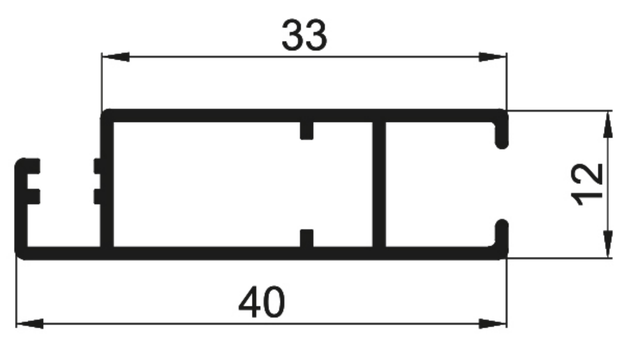

09207 13106

9.2cm Fly Screen

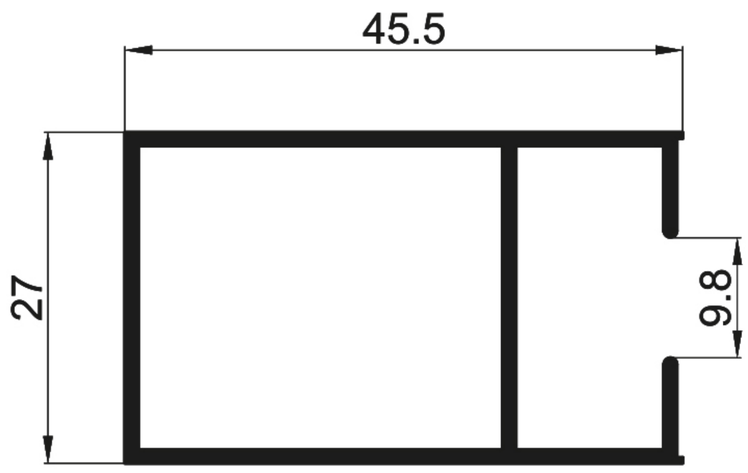

10003 12032

10cm C Section

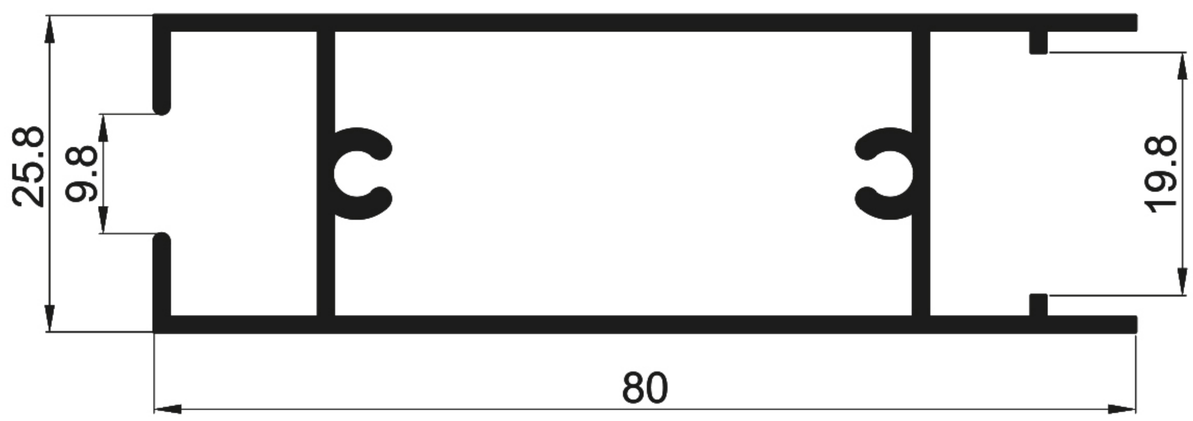

10004 12390

10cm C Section

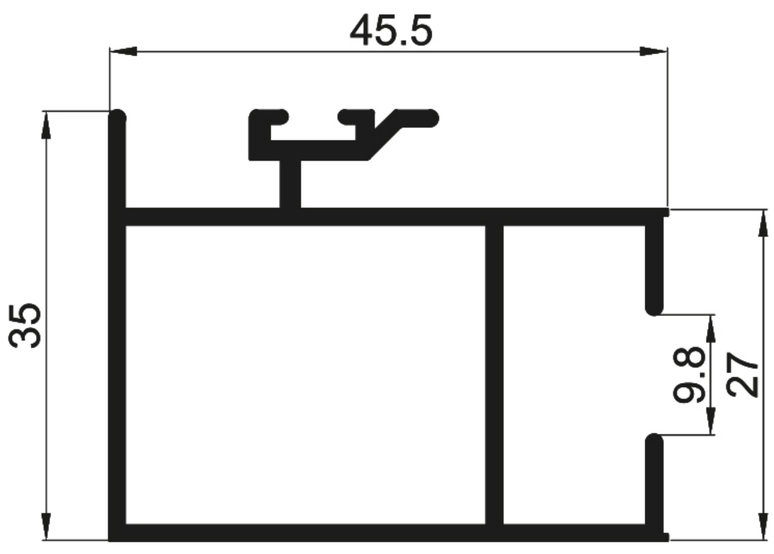

10005 12033

10cm Inter Lock

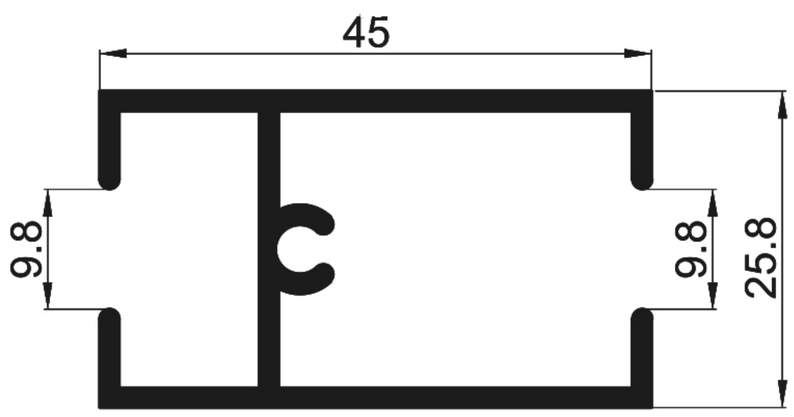

10006 09041

10cm Shutter Top

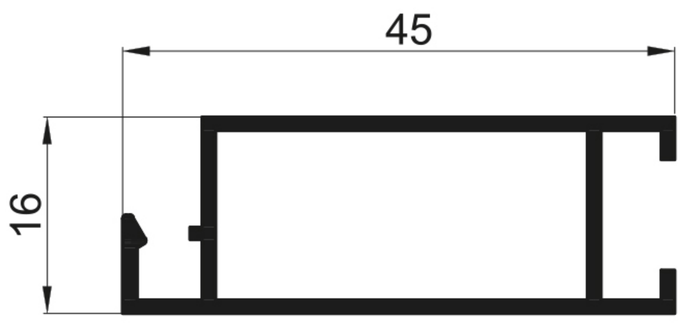

10007 12204

10cm Fly Screen

10008 11263

10cm Frame Clip Inside

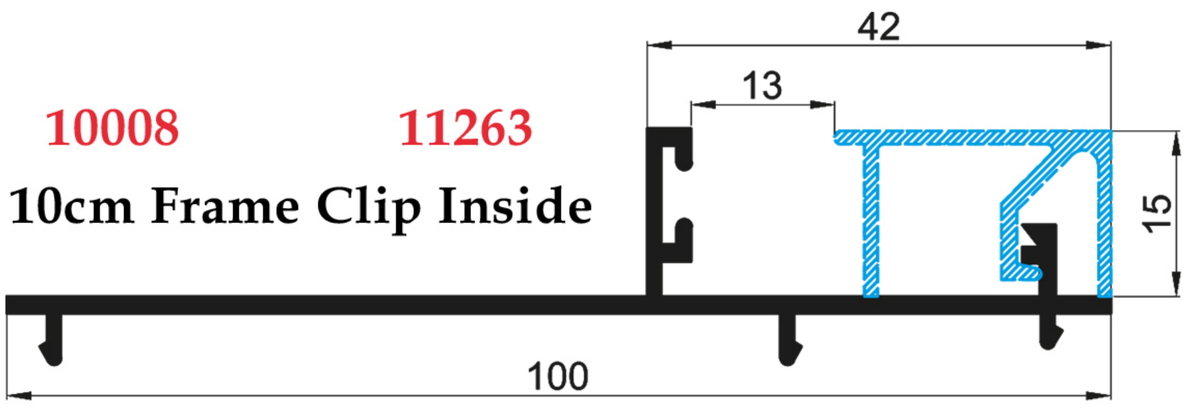

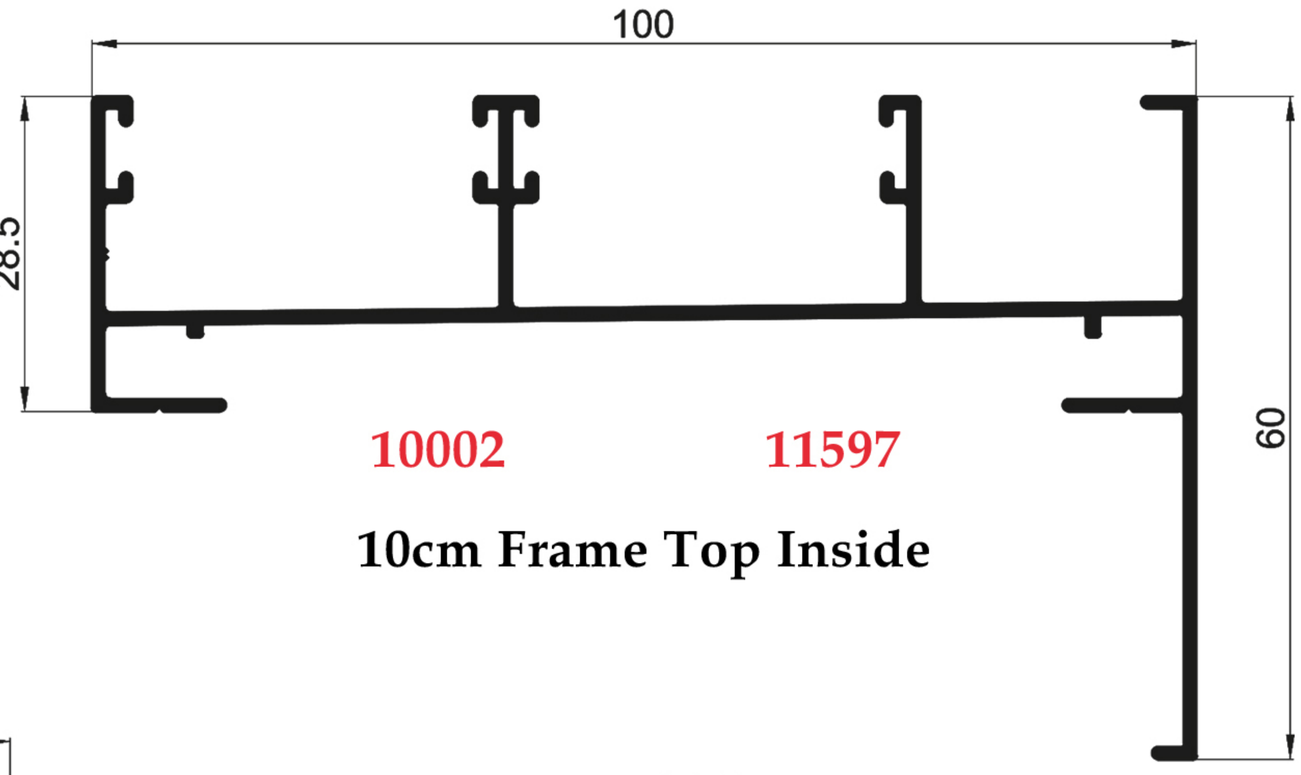

10002 11597

10cm Frame Top Inside

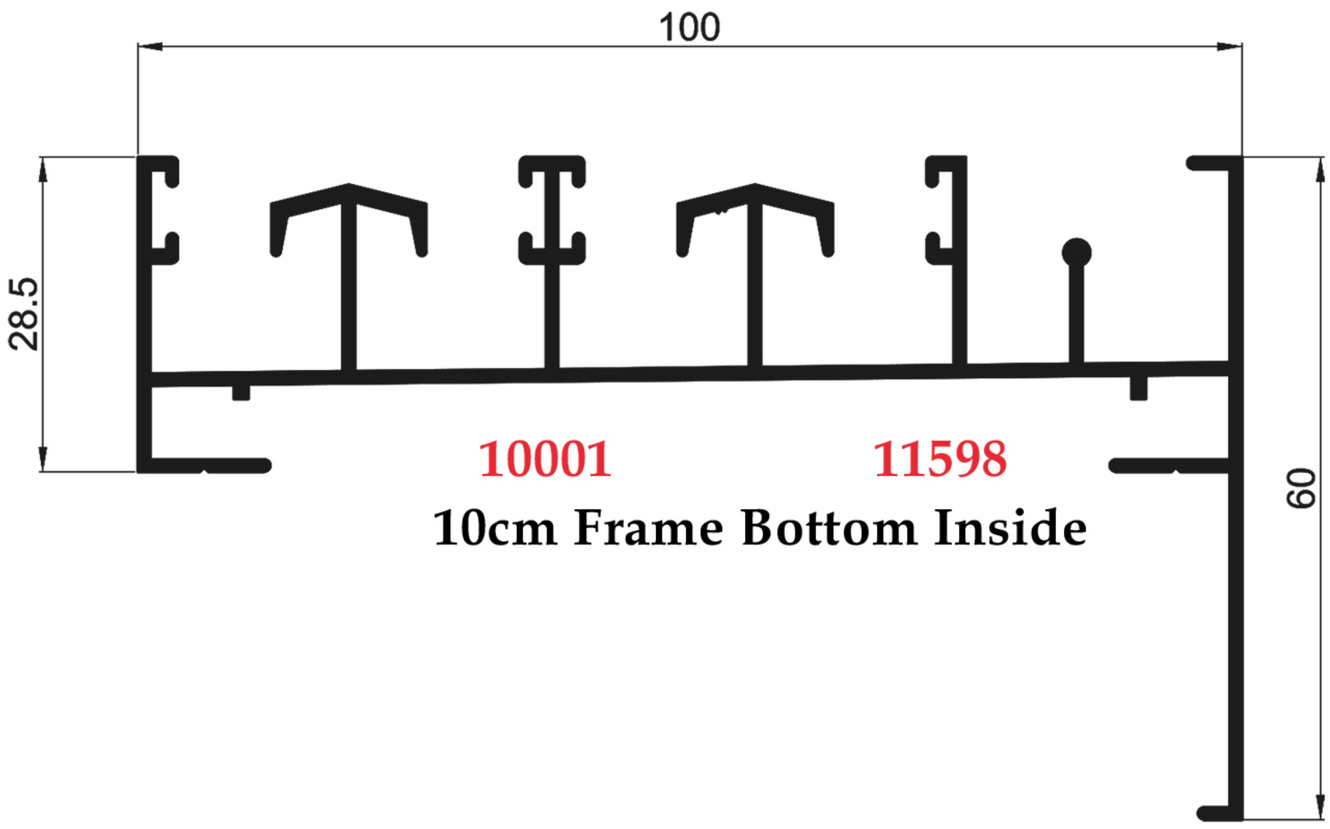

10001 11598

10cm Frame Bottom Inside

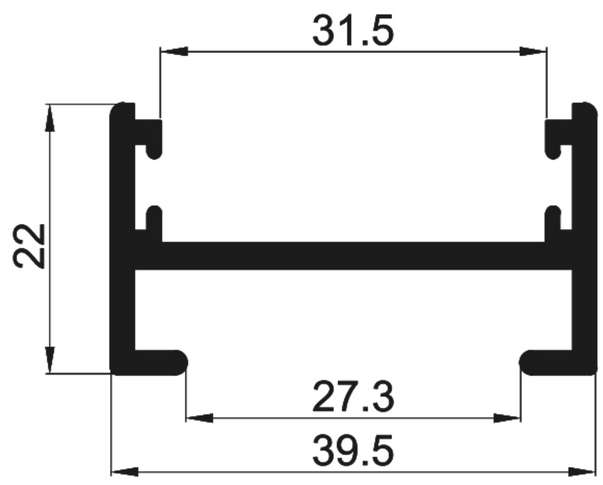

10009 09201

H Section For 10cm Shutter

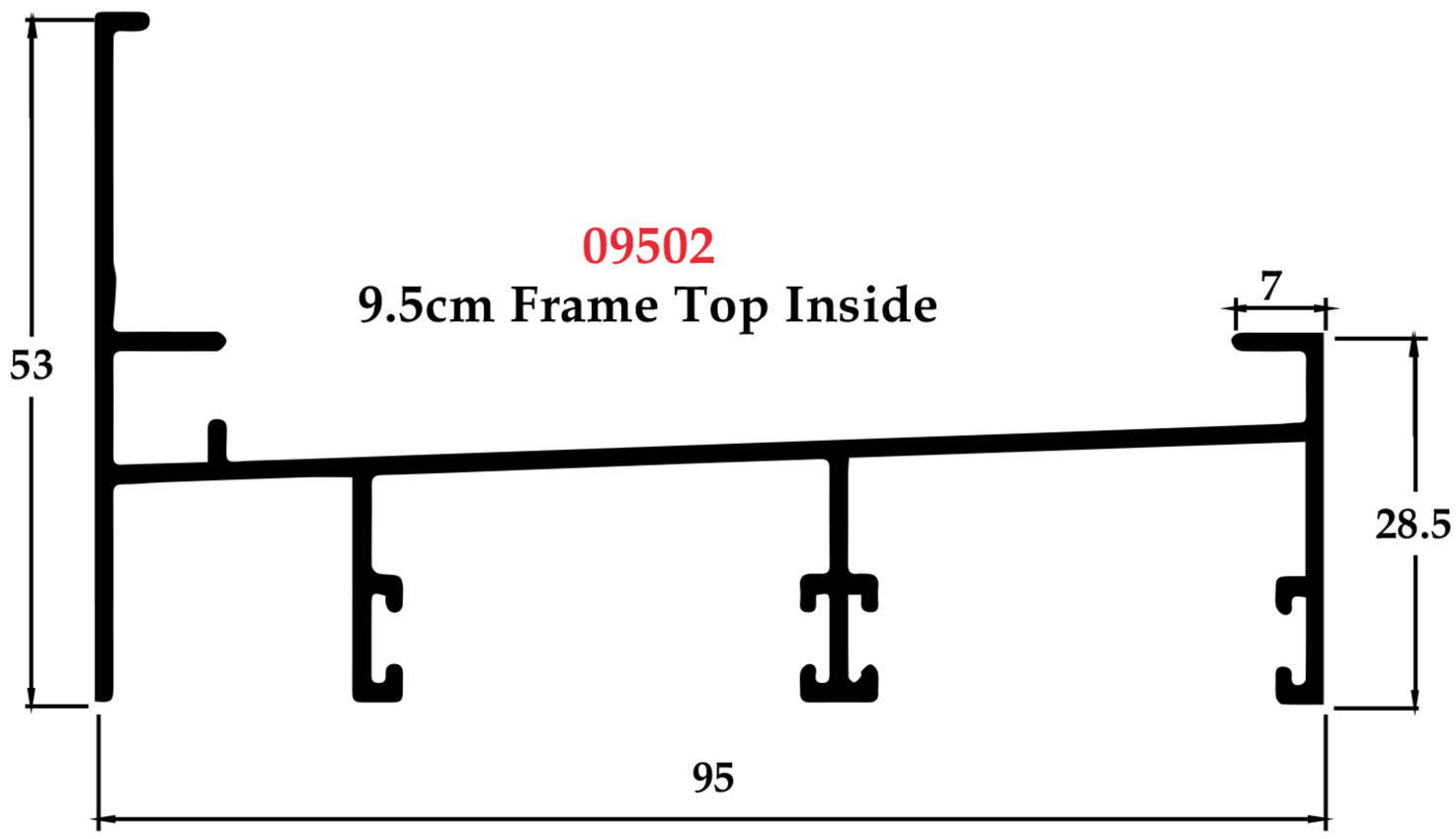

09502
9.5cm Frame Top Inside

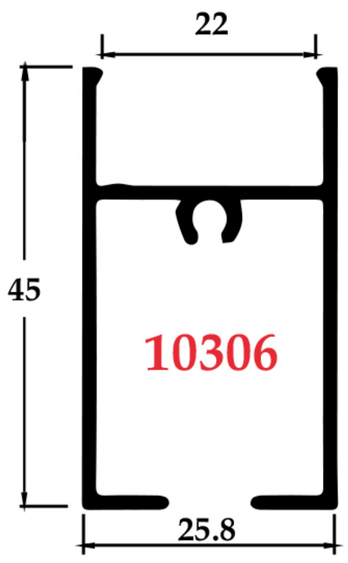

10306

10cm +9.5cm
Shutter Top
DBL Glass

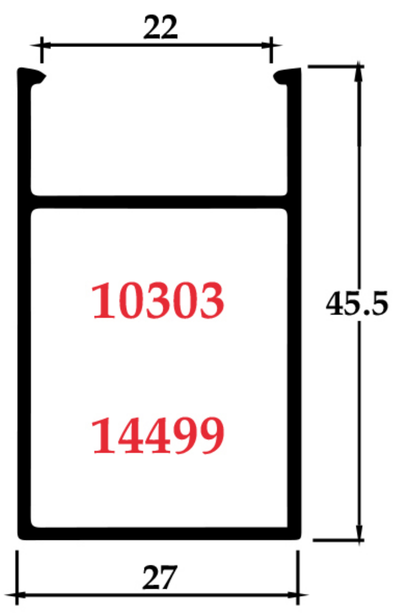

10303

14499

09501
9.5cm Frame Bottom Inside

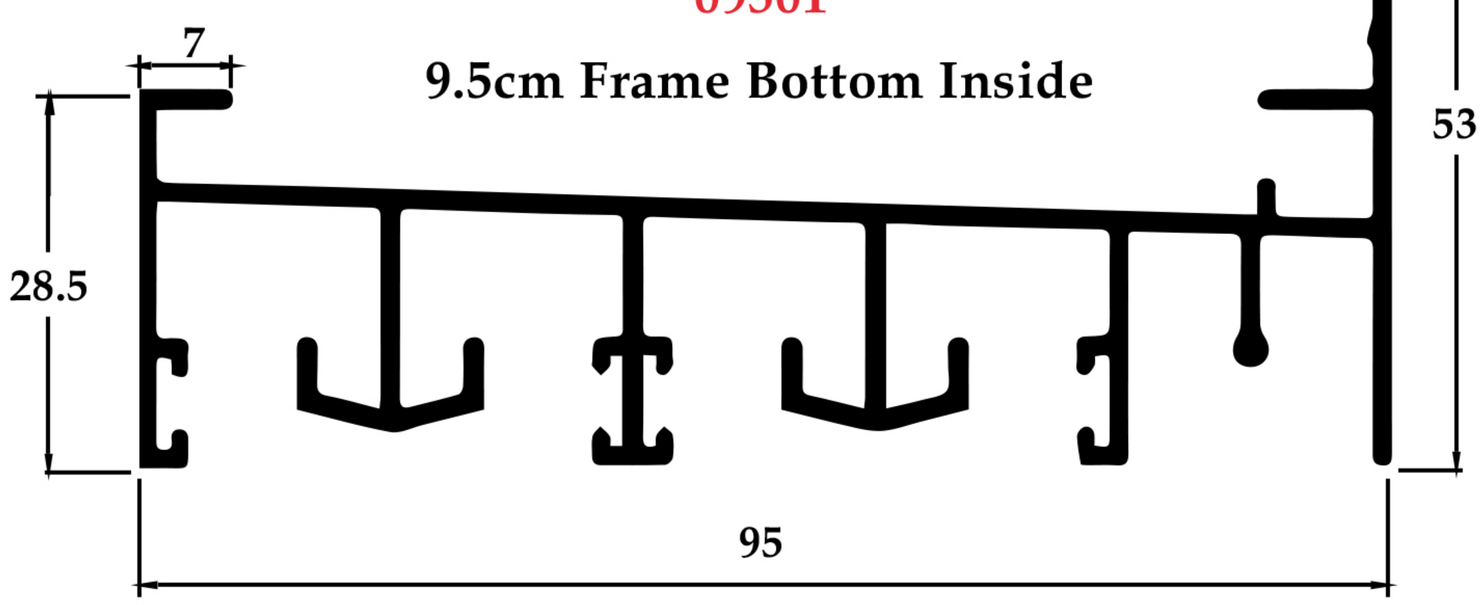

10cm +9.5cm
C Section DBL Glass

04271 09366

Fly Screen Handle Bar

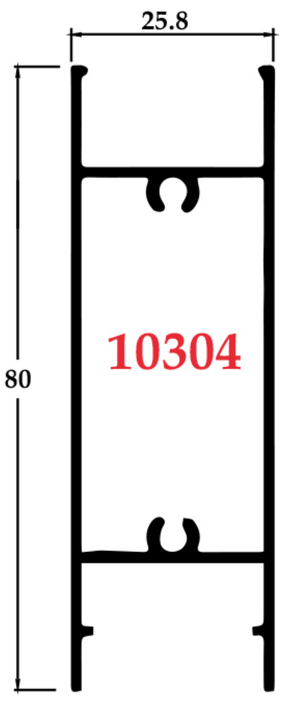

10304

10cm +9.5cm
Shutter Bottom
DBL Glass

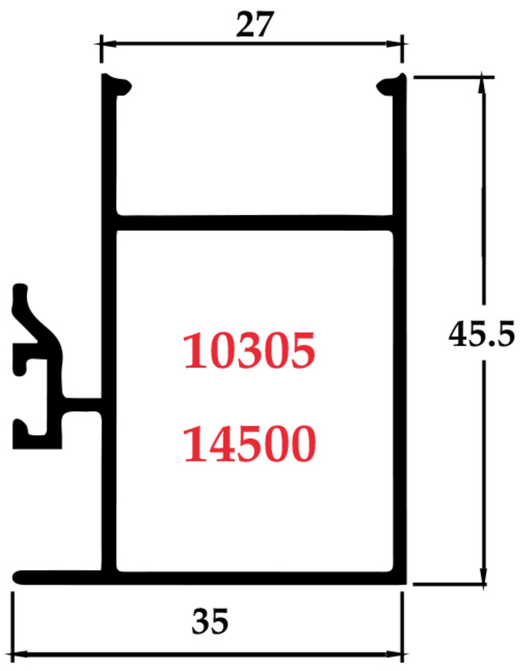

10305

14500

10cm +9.5cm
Inter Lock DBL Glass

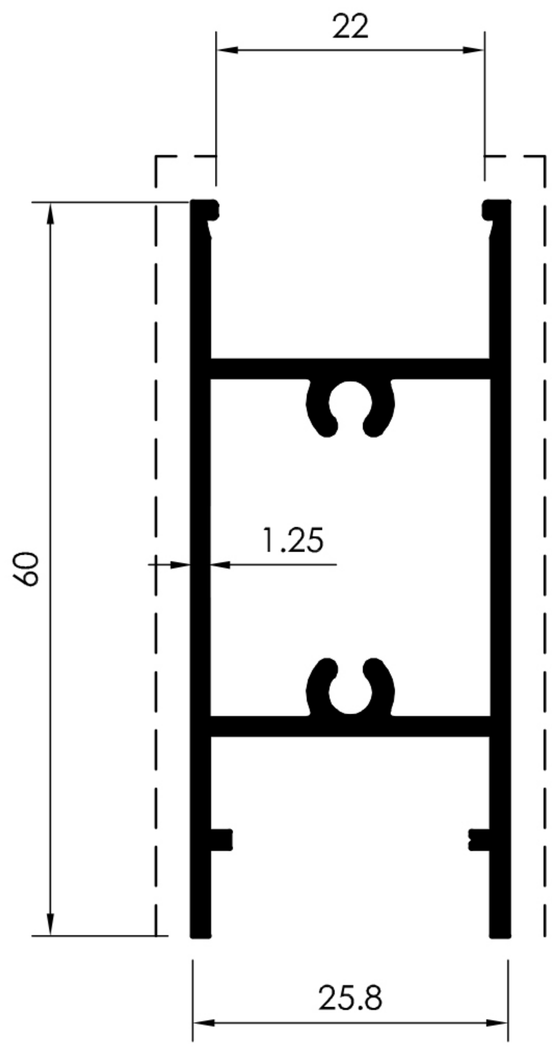

14501

10cm +9.5cm
Small Shutter Bottom
DBL Glass

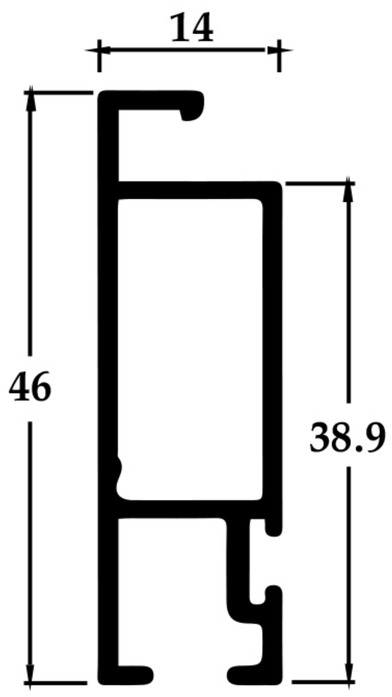

10507 12745

10cm +9.5cm
Brush Fly Screen

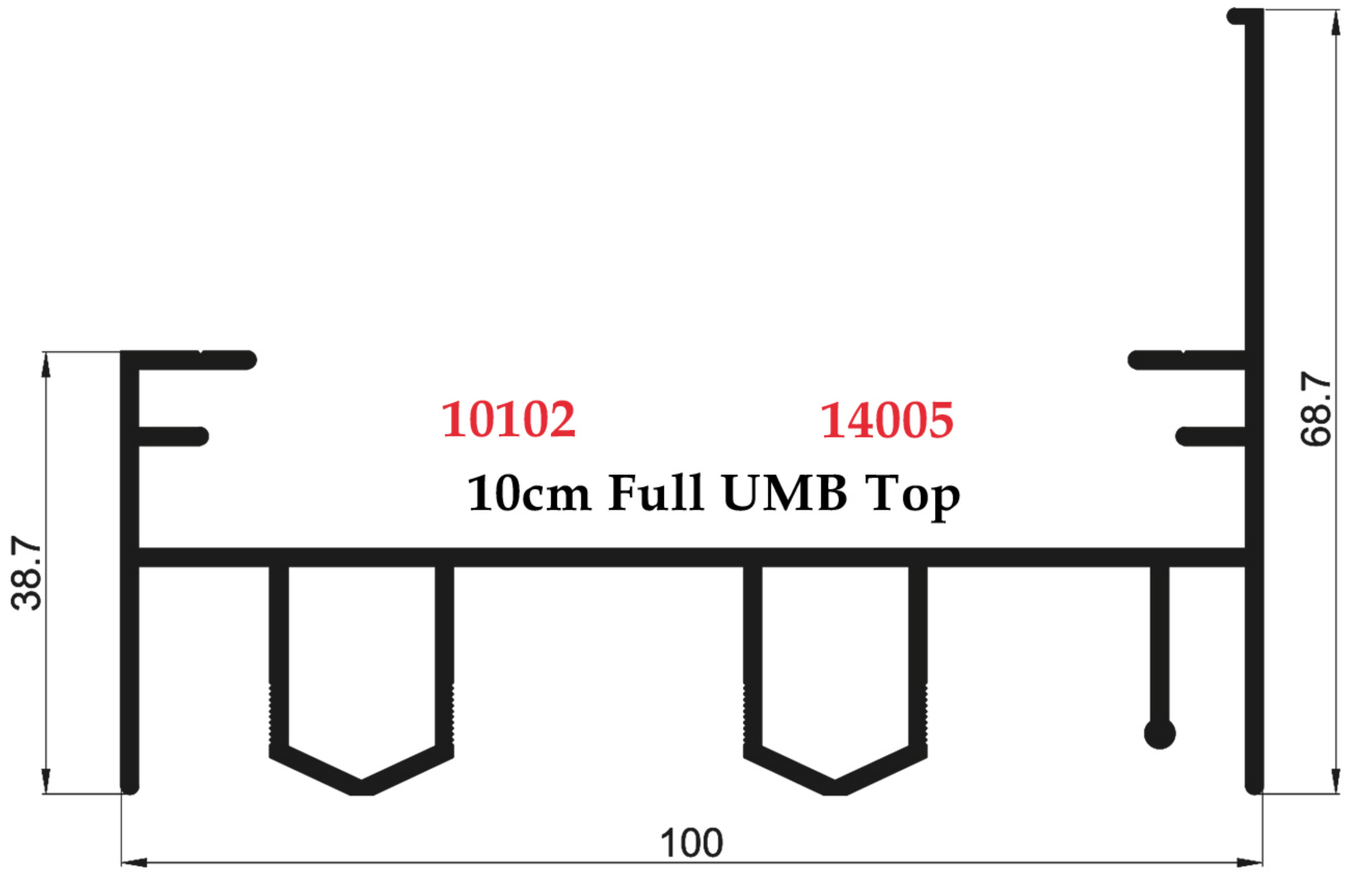

10102 14005

10cm Full UMB Top

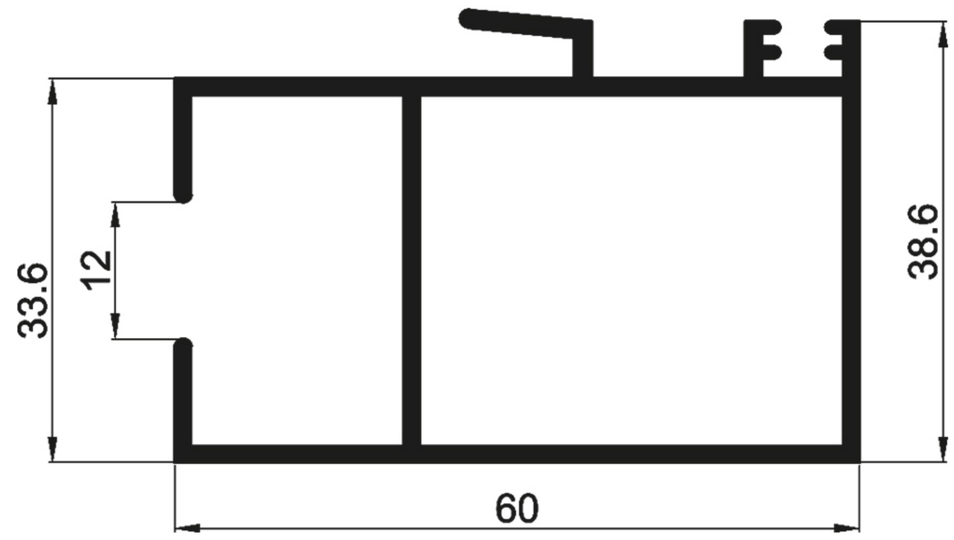

10205 12617

10cm Full UMB Inter Lock Single Glass

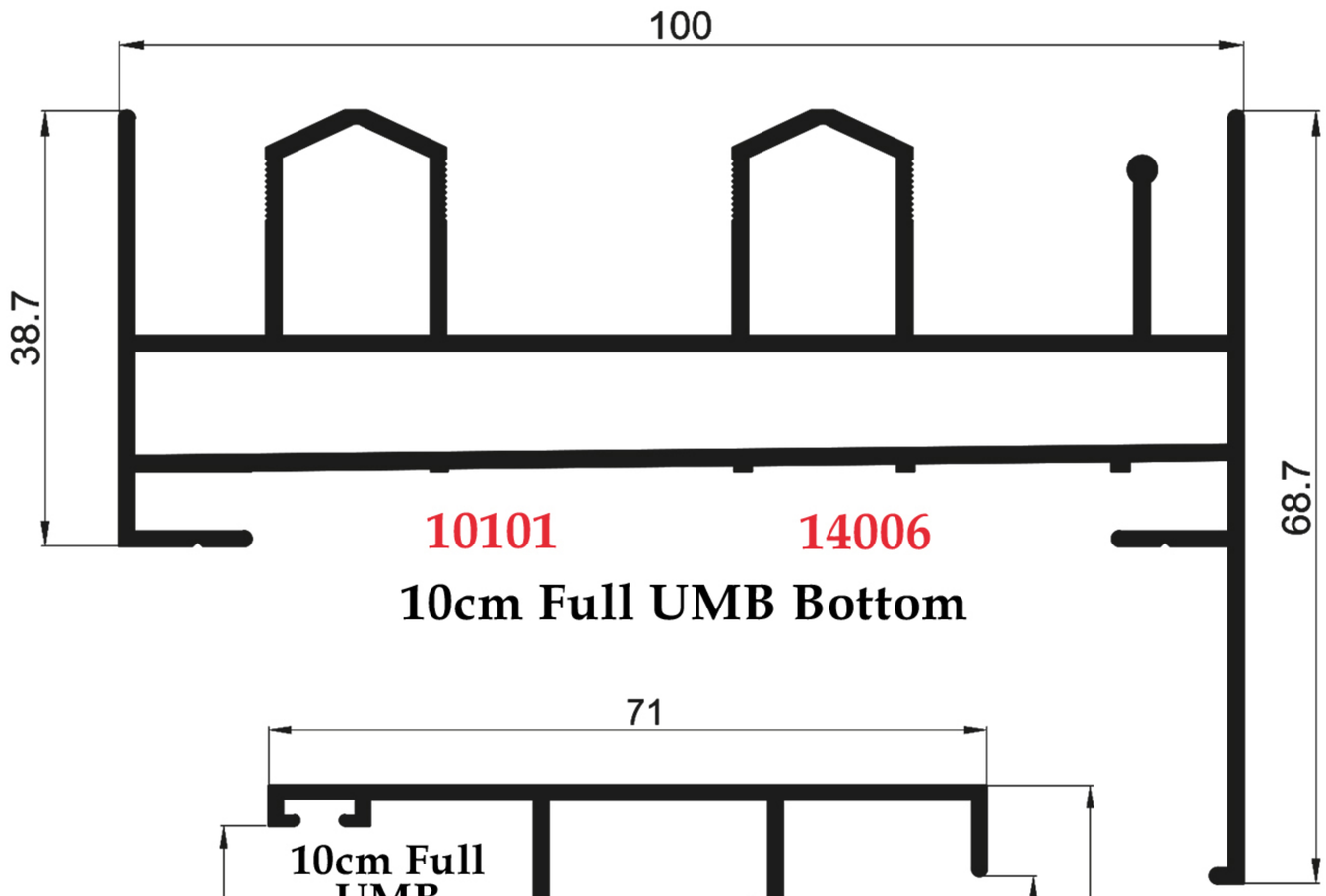

10101 14006

10cm Full UMB Bottom

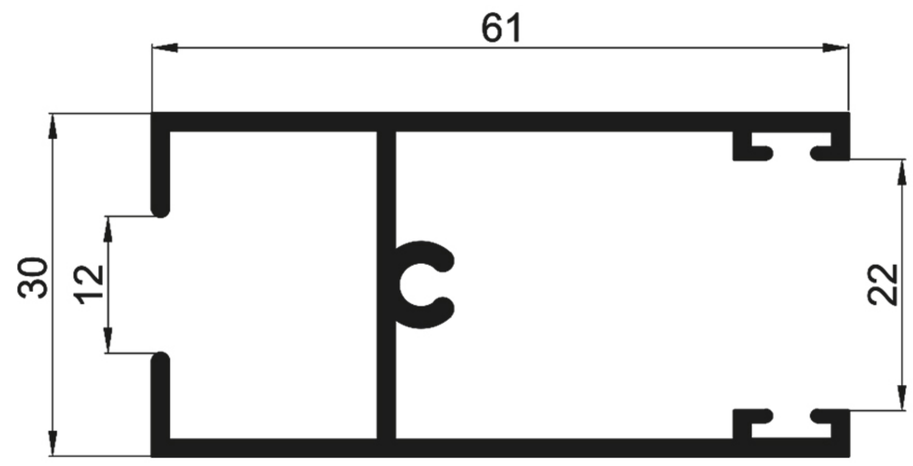

10206 11702

10cm Full UMB Shutter Top Single Glass

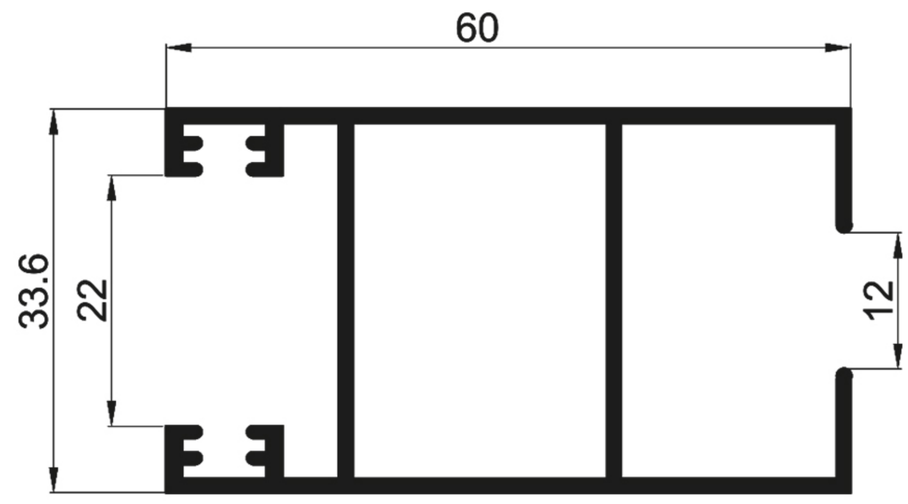

10203 12616

10cm Full UMB C Section Single Glass

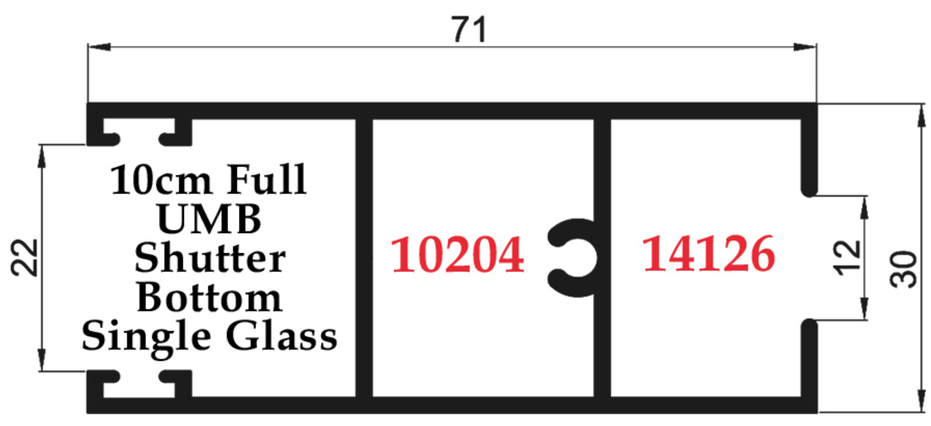

10204 14126

10801

4 Line Full UMB Sliding Frame

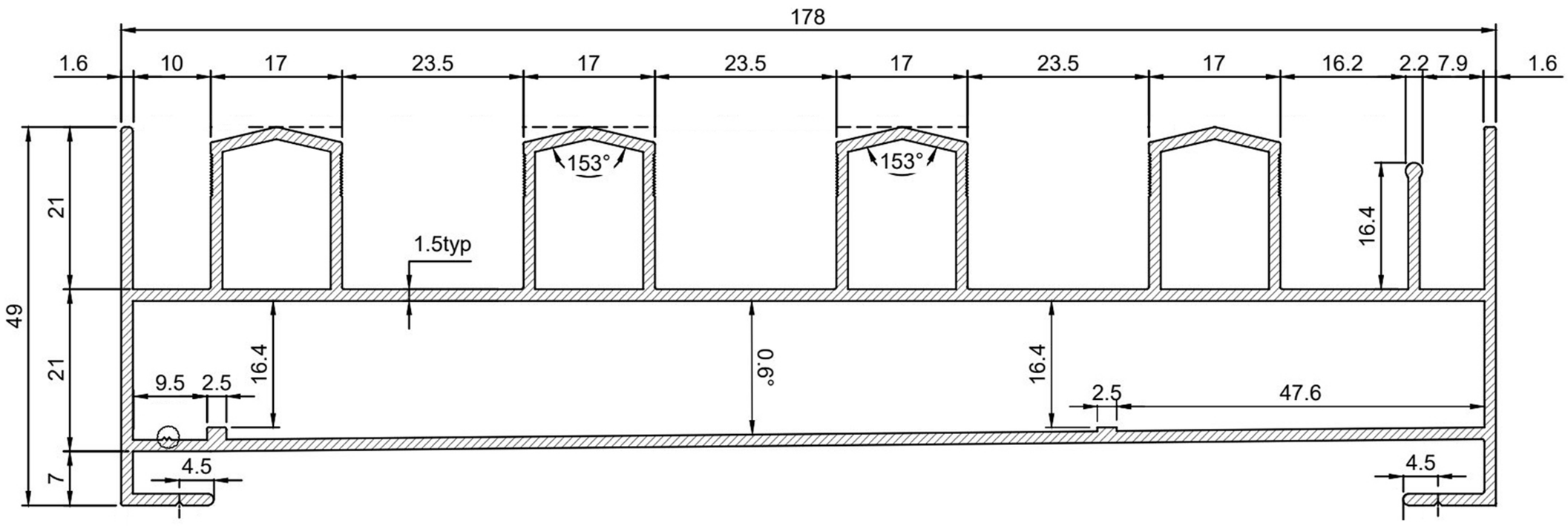

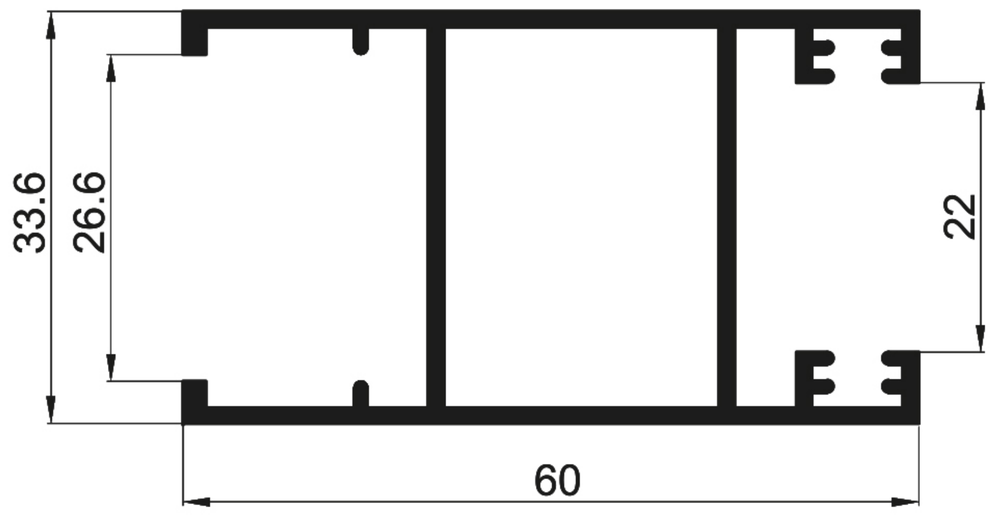

10103 12321

10cm Full UMB
C Section Double Glass

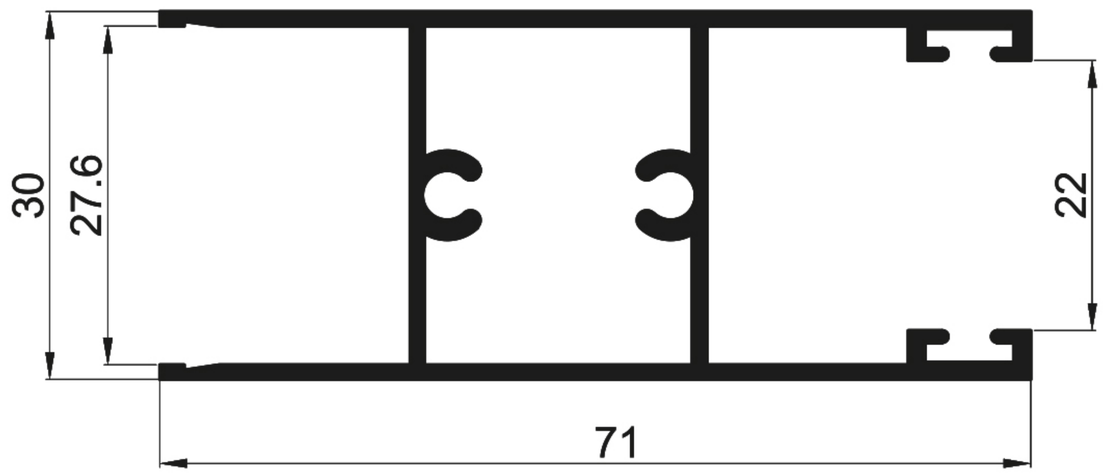

10104 14298

10cm Full UMB Shutter Bottom
Double Glass

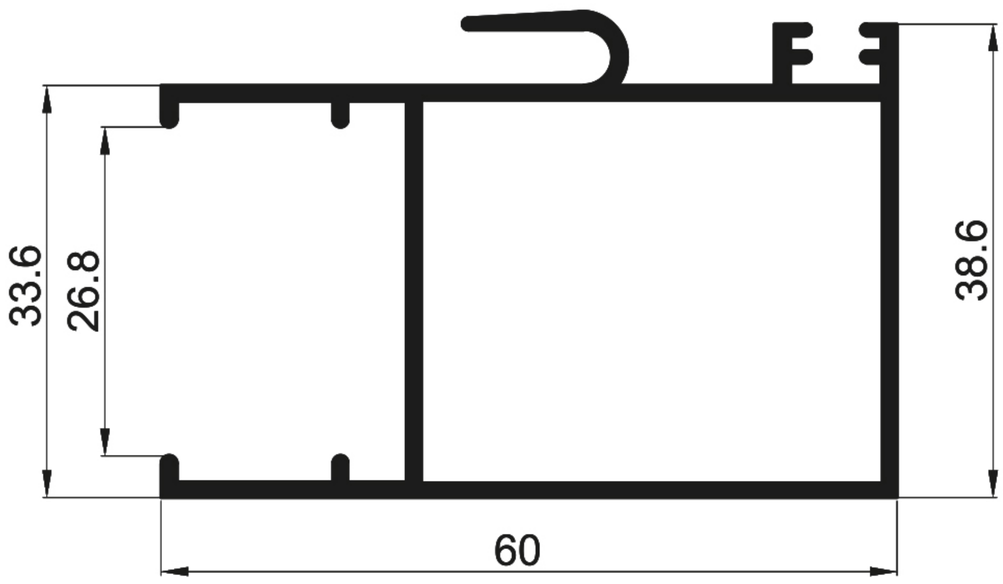

10105 12322

10cm Full UMB Inter Lock
Double Glass

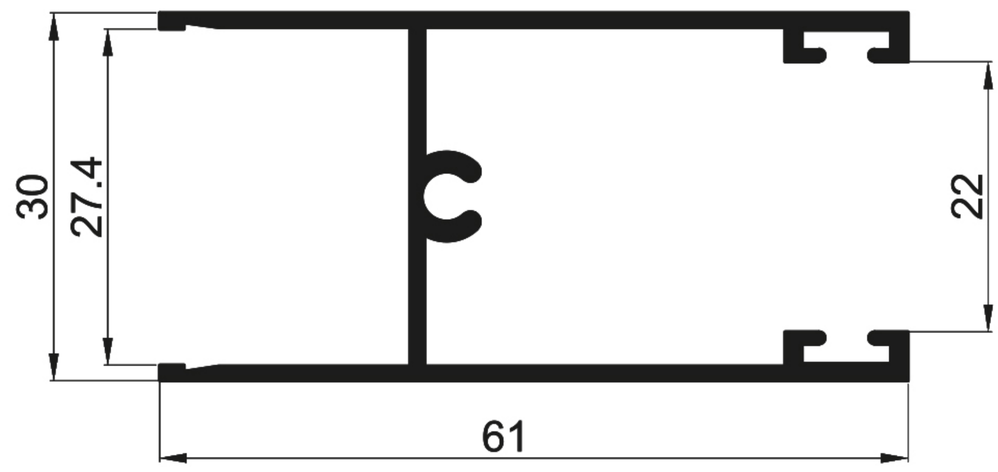

10106 9931

10cm Full UMB Shutter Top
DBL Glass

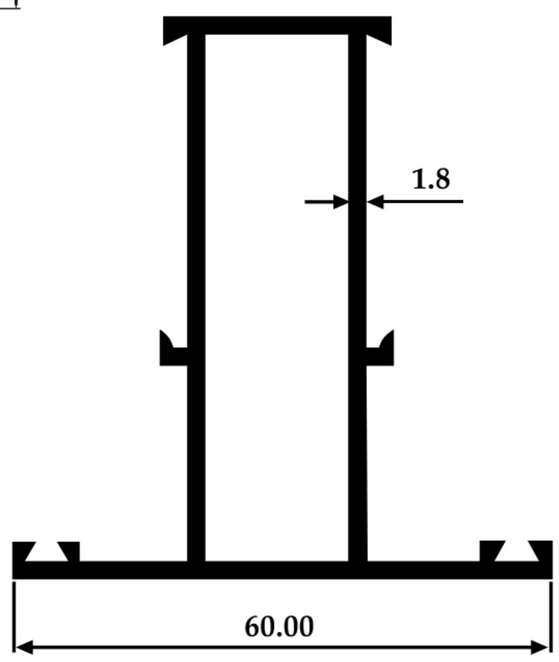

13464 10110

60mm Speical T

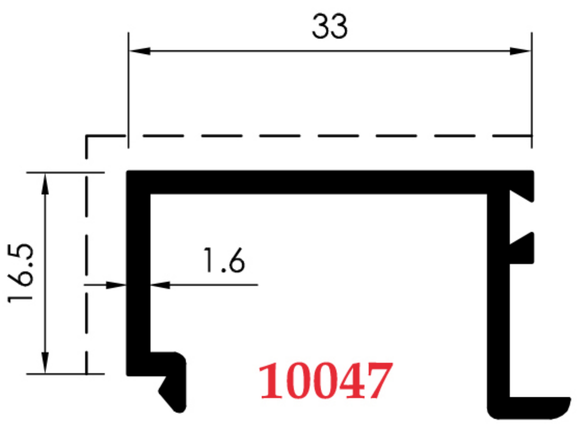

10047

Clip Berculase

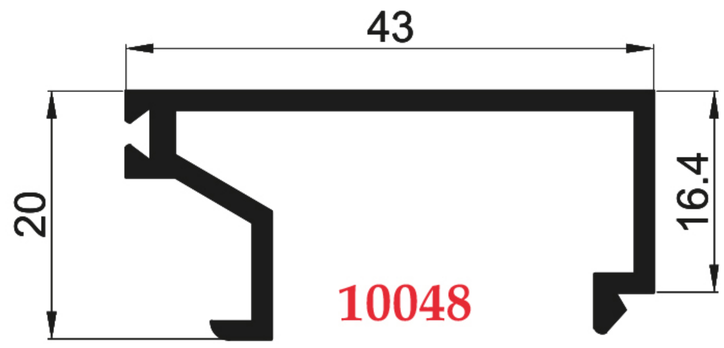

10048

Big Berculase For Fix Clip

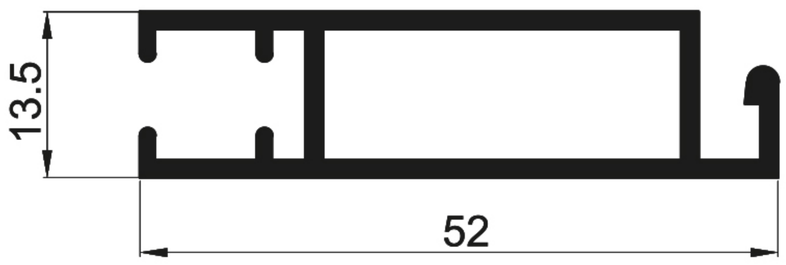

10107 12095

10cm Full UMB Fly Screen

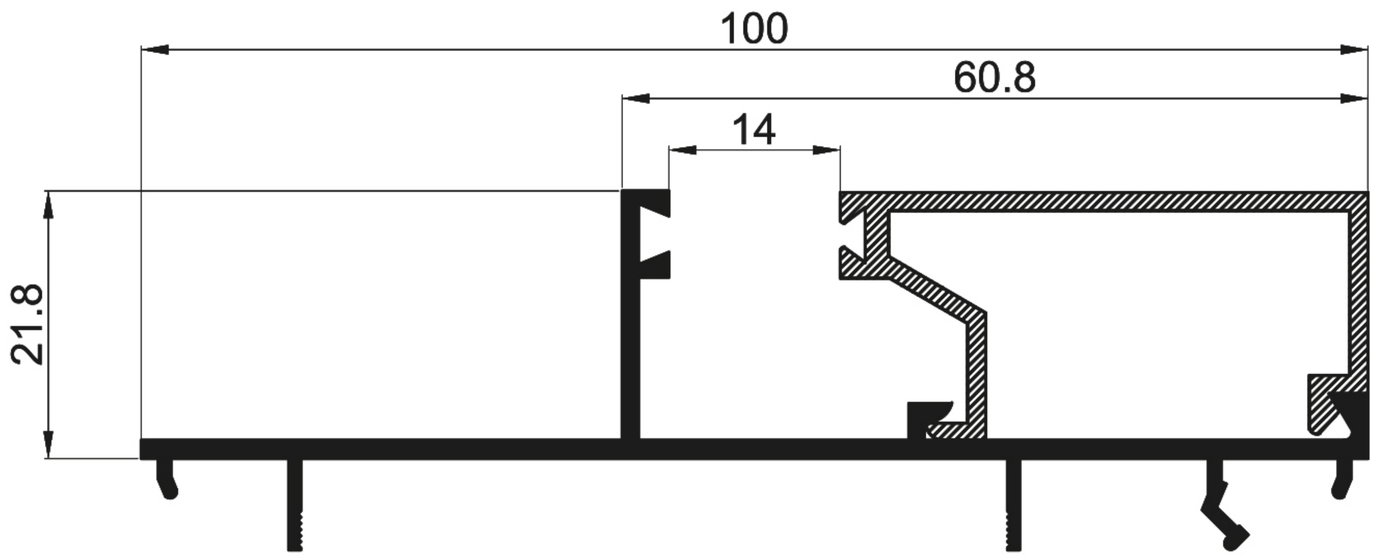

10108 11534

10cm Fix Clip Full Umbrella

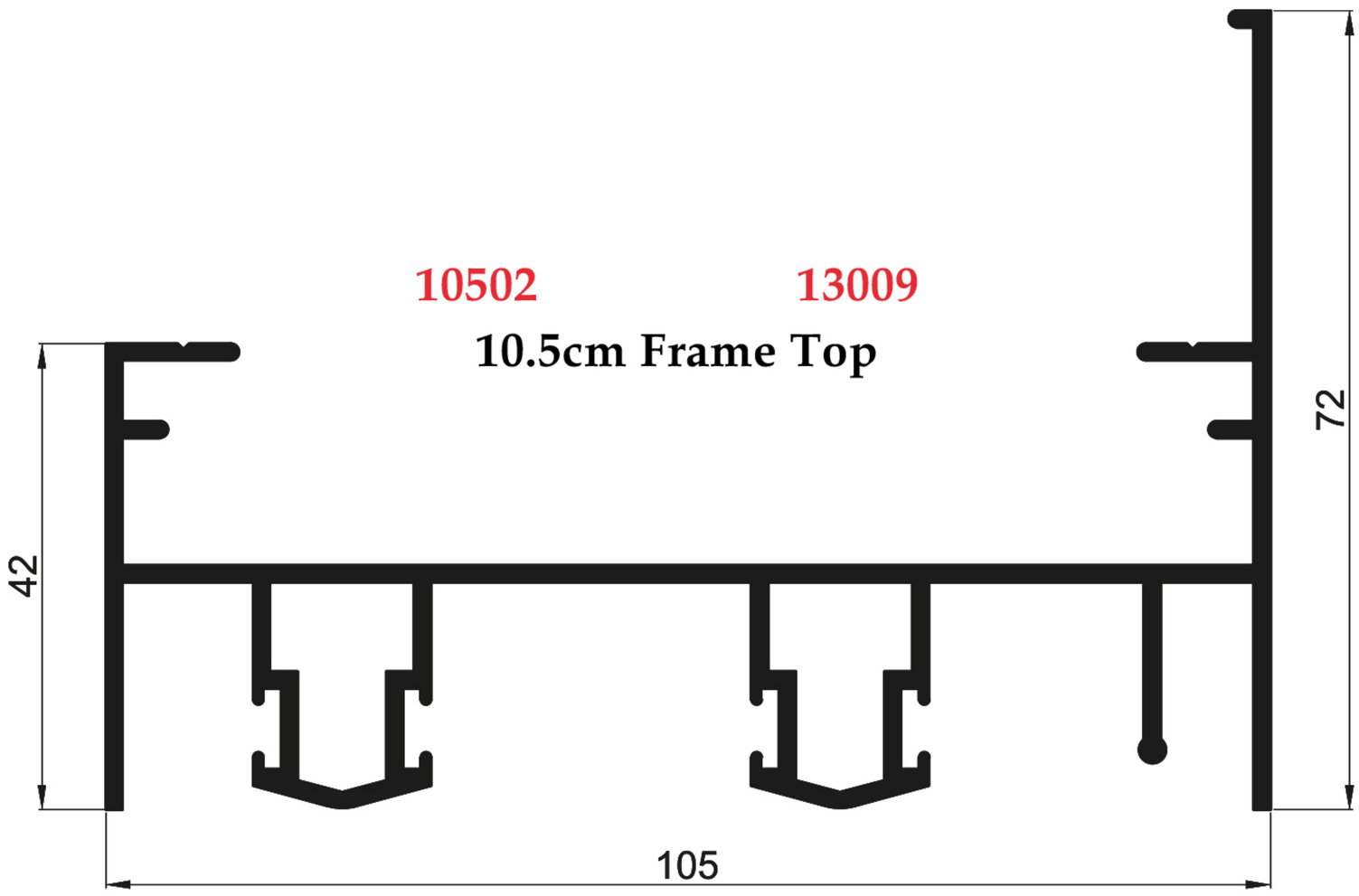
10502
13009
10.5cm Frame Top
42
72
105

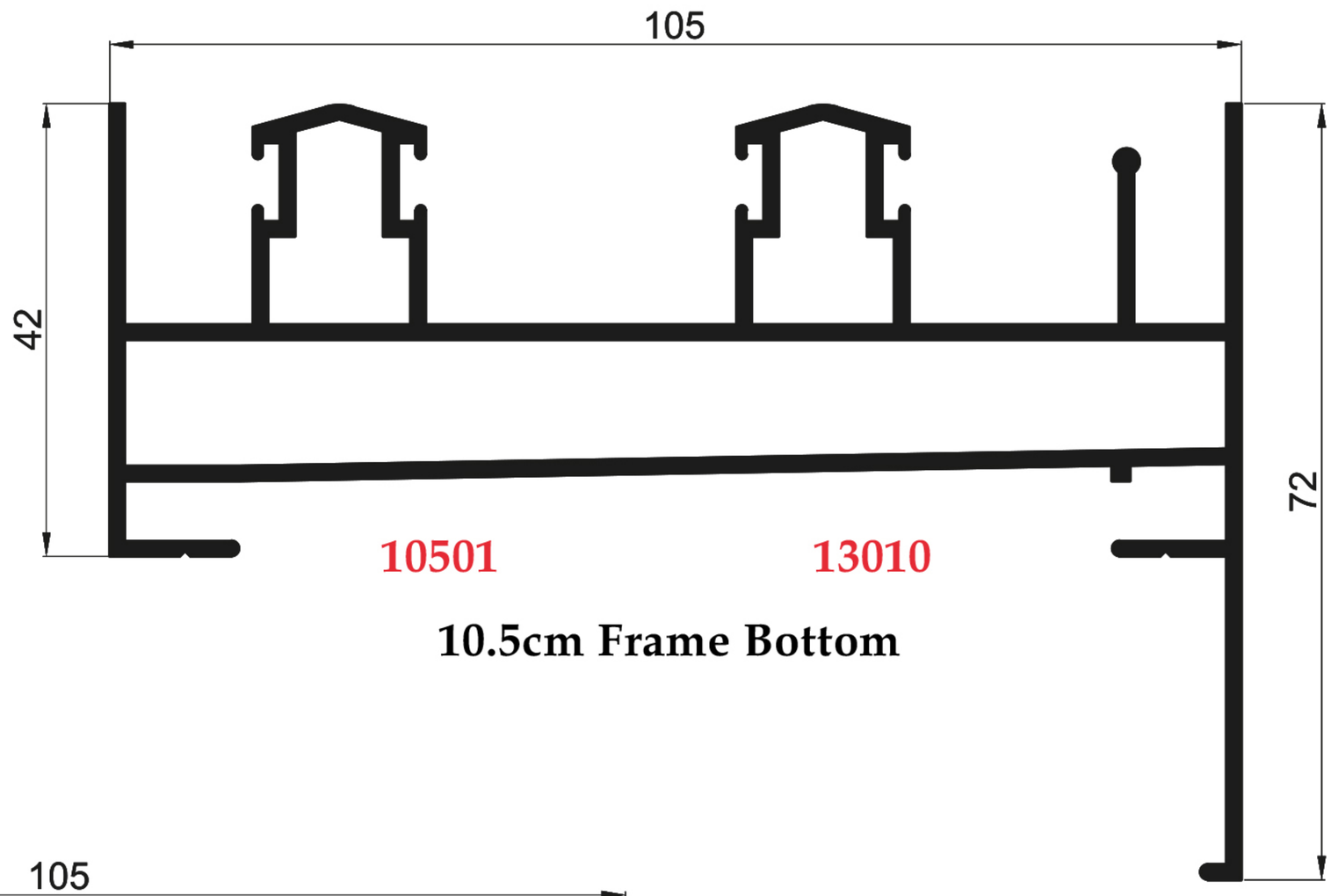
105
42
72
10501
13010
10.5cm Frame Bottom

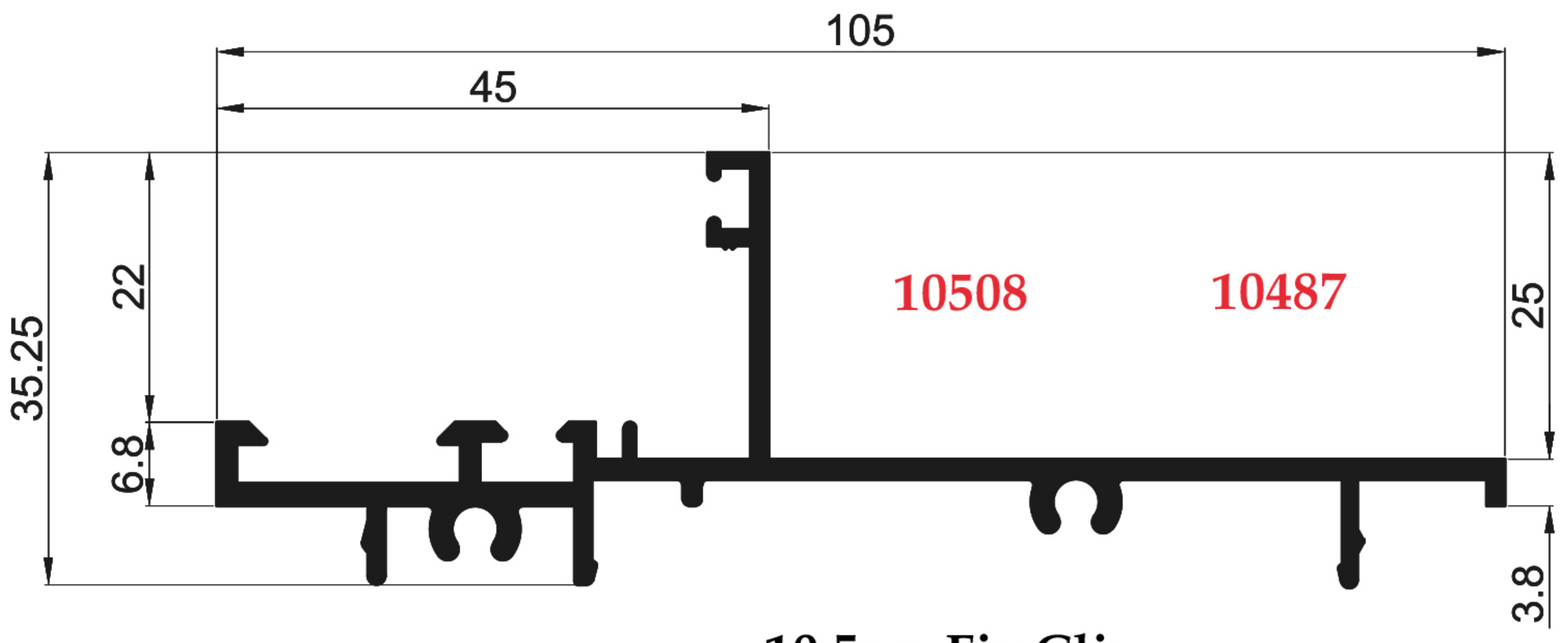
105
45
35.25
22
6.8
10508
10487
25
3.8
10.5cm Fix Clip

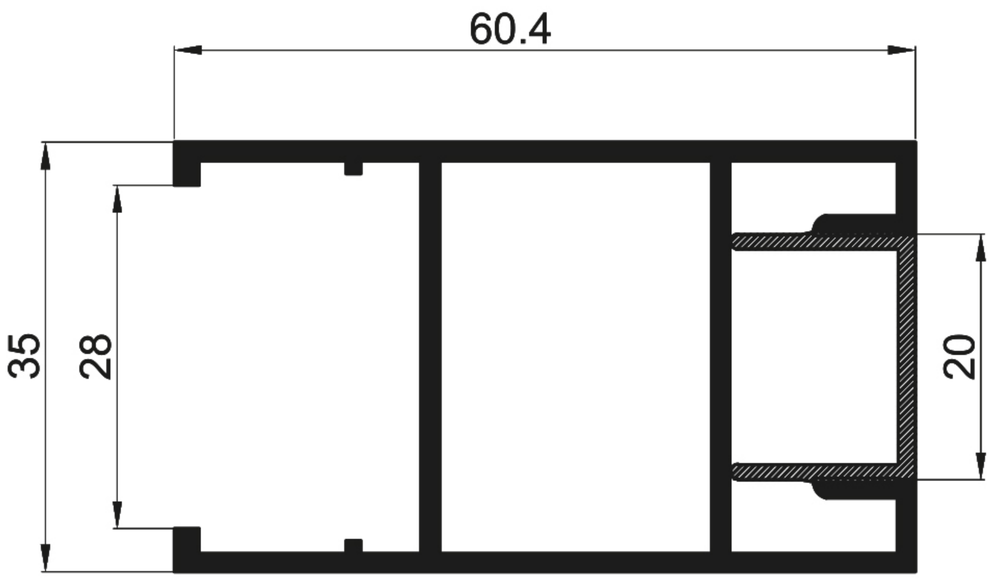

10503 13012

10.5cm C Section

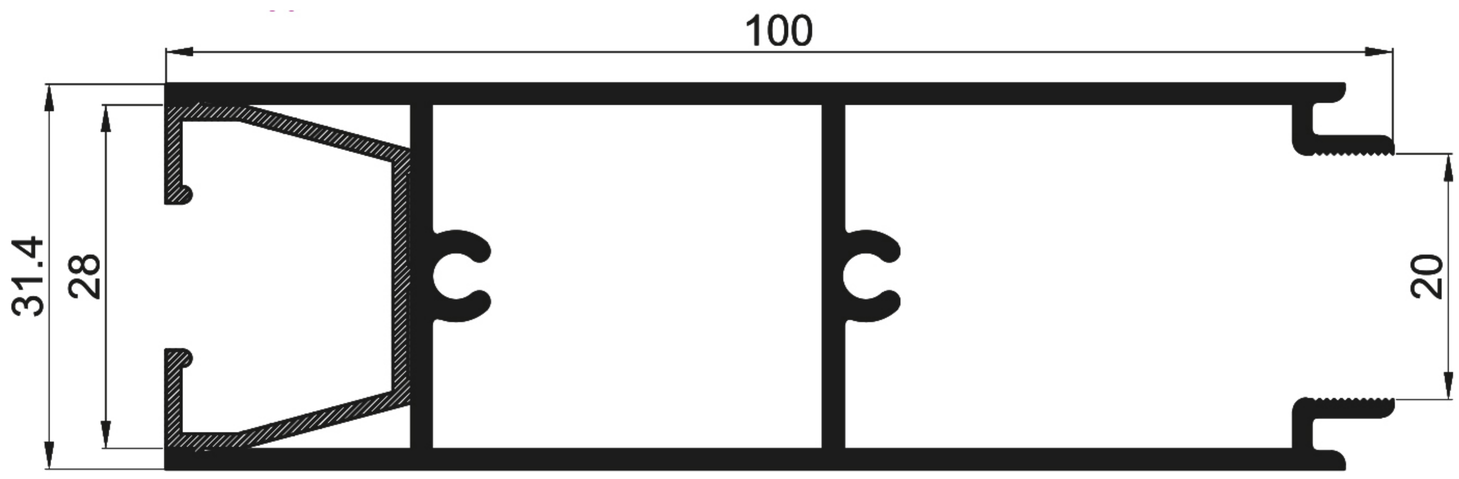

10504 13013

10.5cm Shutter Bottom

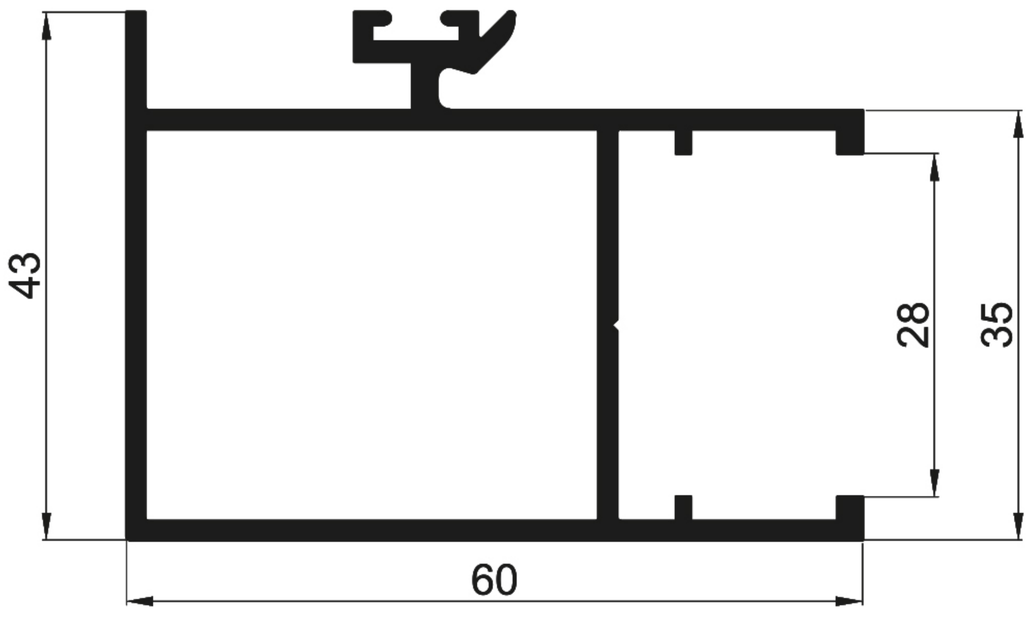

10505 13012

10.5cm Inter Lock

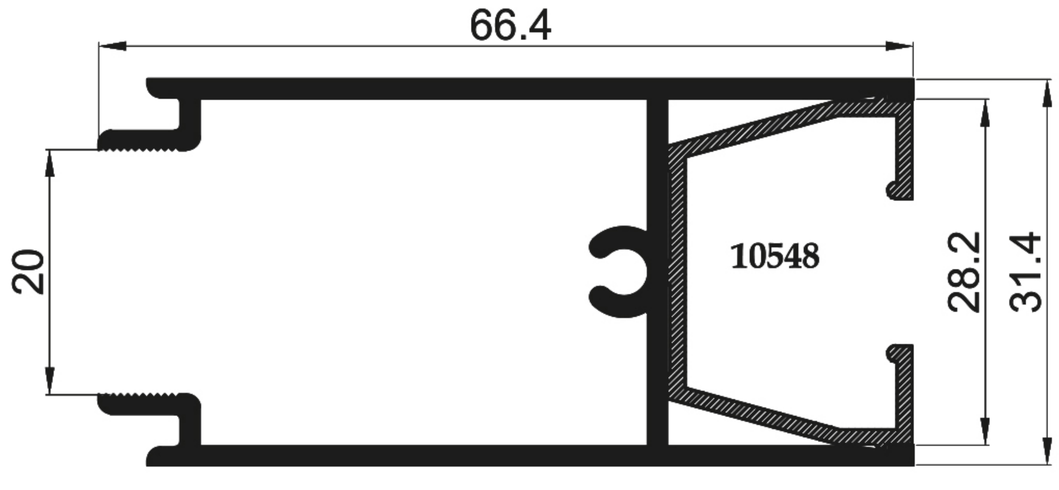

10506 10485

10.5cm Shutter Top

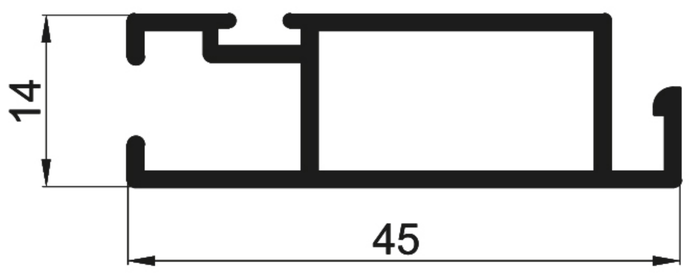

10507 12745

10.5cm Fly Screen

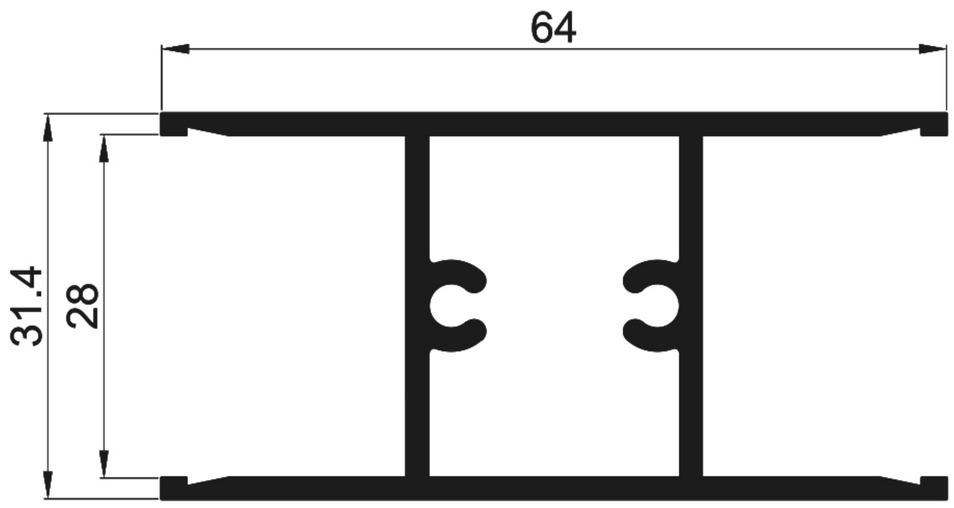

10511 13025

10.5cm Partition

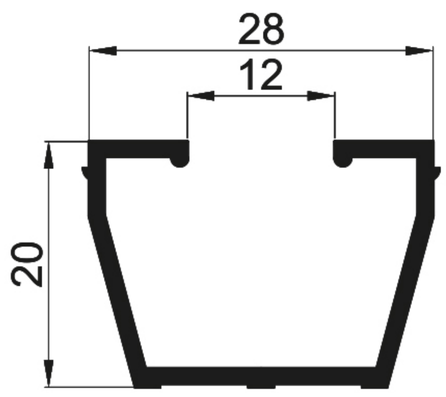

10512 10486

10.5cm U Clip
For Double Glazing

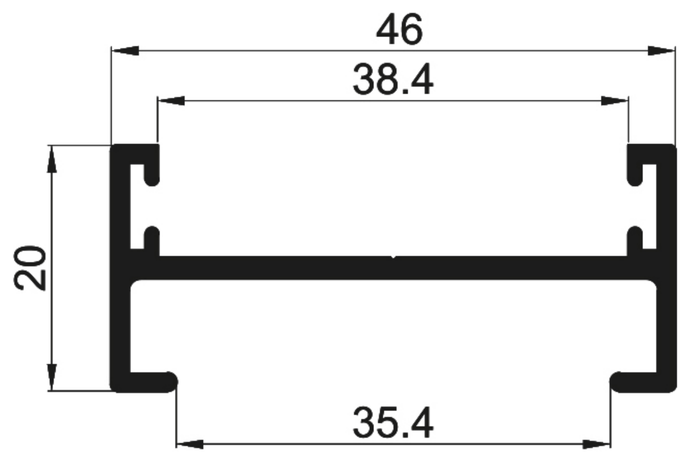

10514 10492

10.5cm H Section

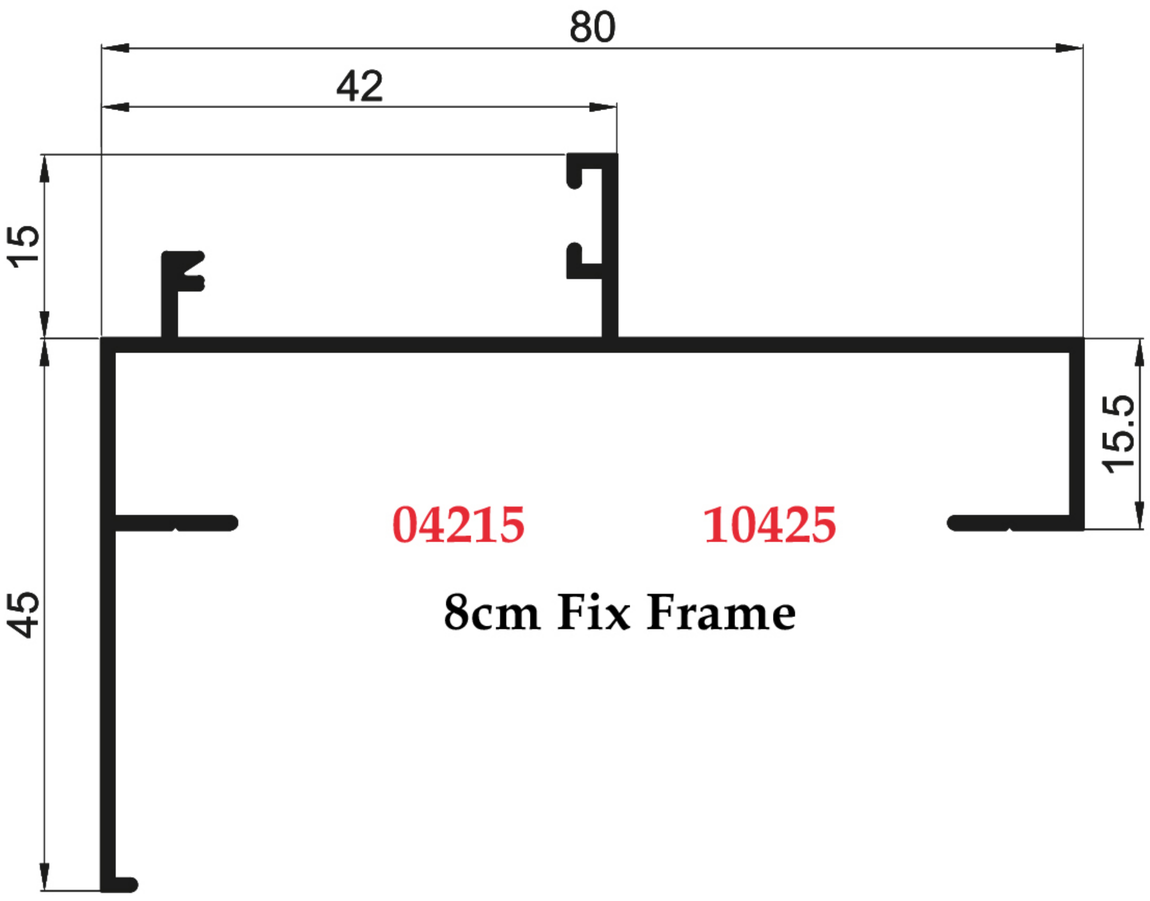

8cm Fix Frame

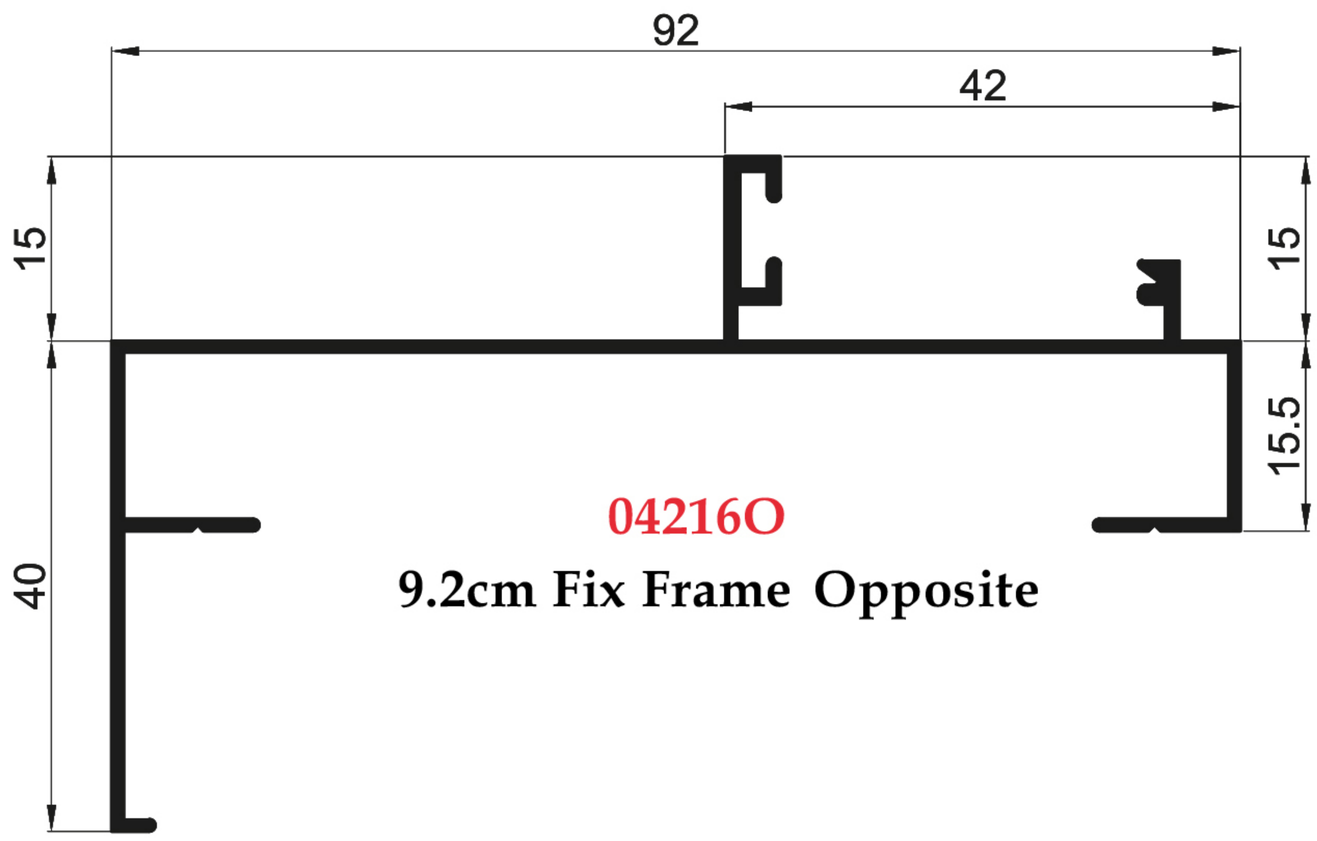

9.2cm Fix Frame Opposite

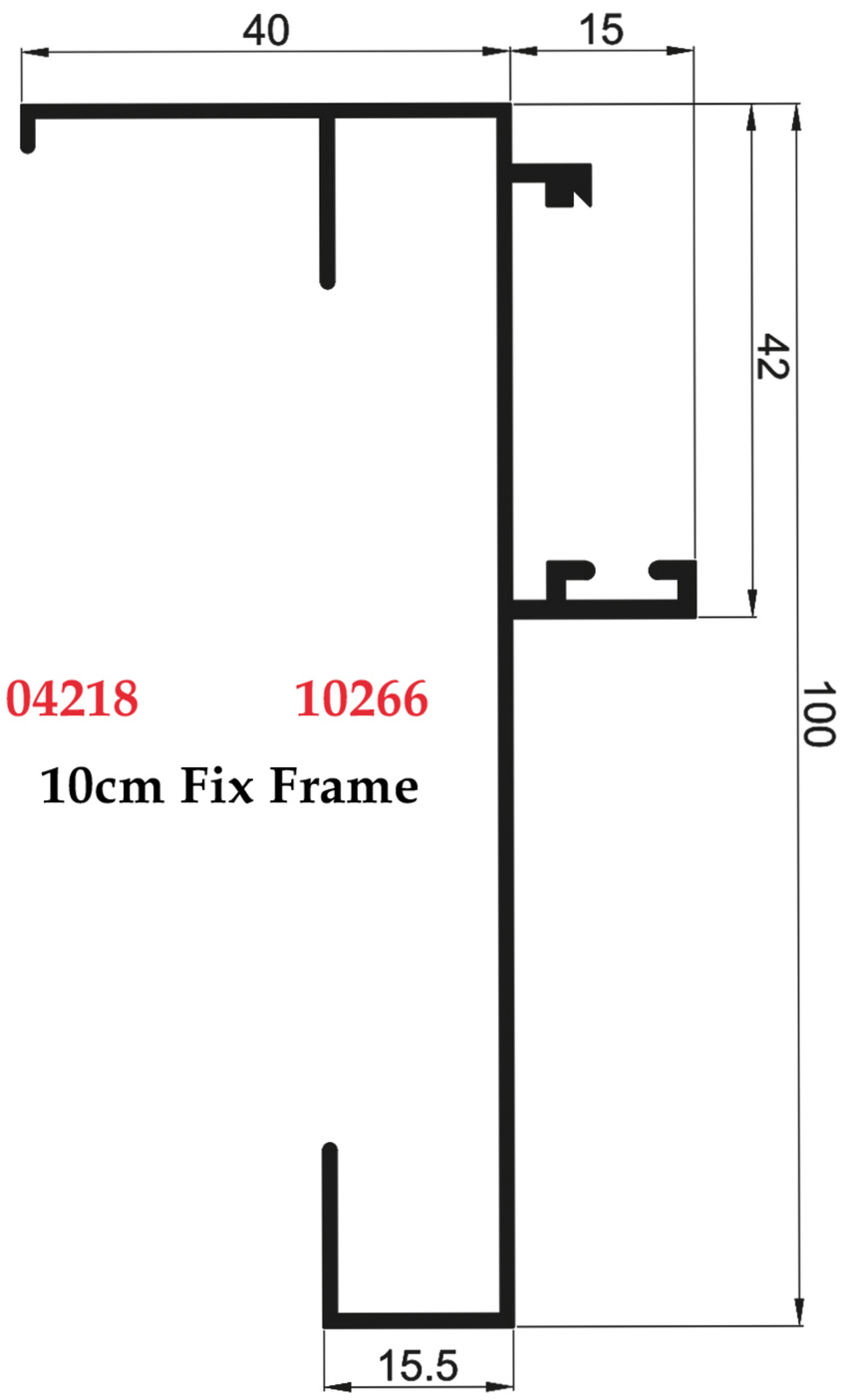

10cm Fix Frame

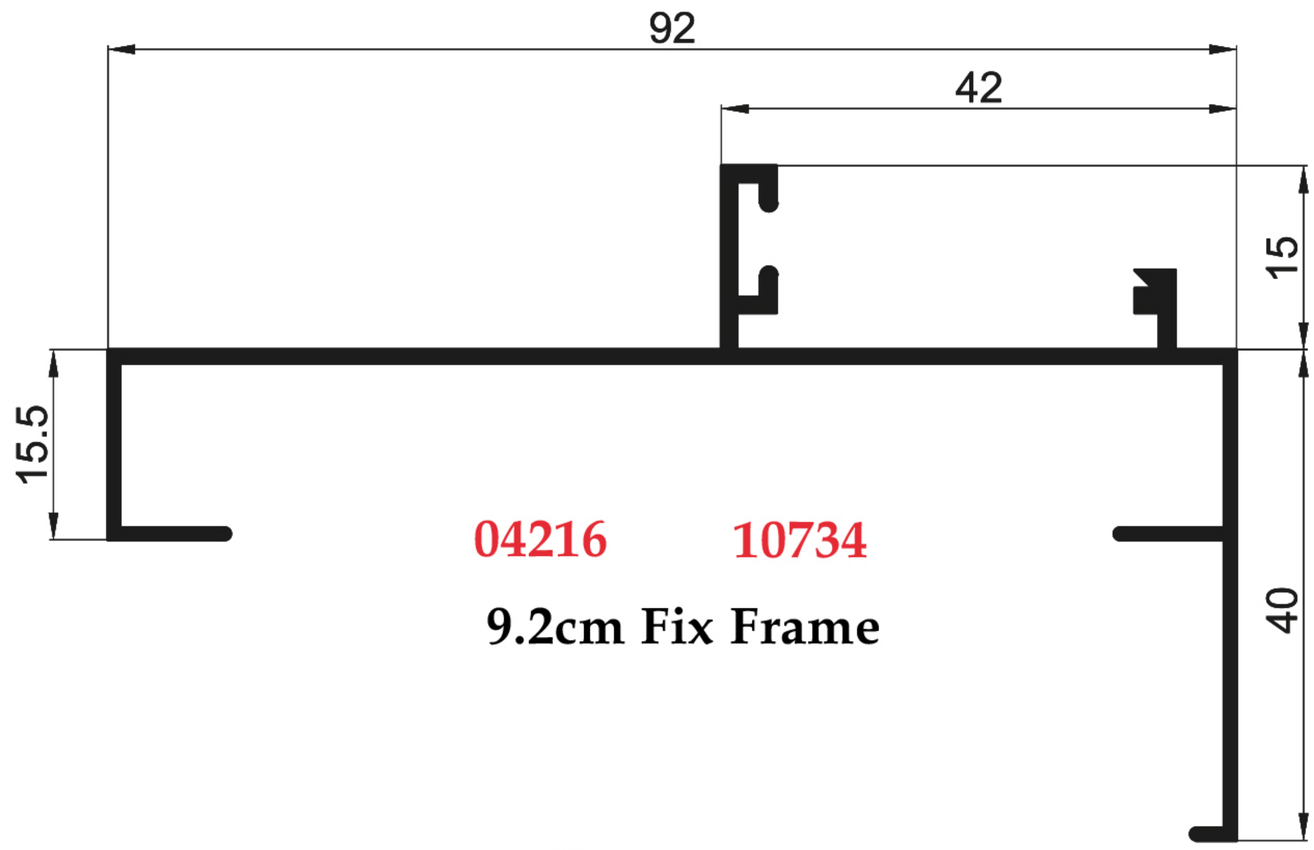

9.2cm Fix Frame

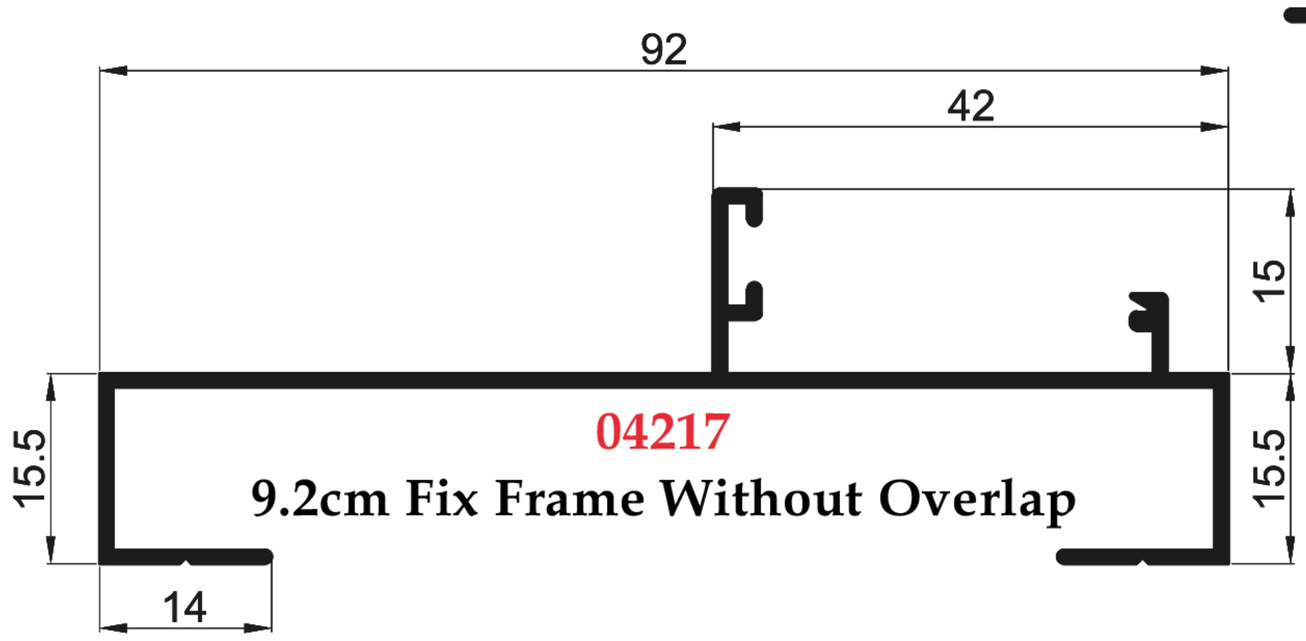

9.2cm Fix Frame Without Overlap

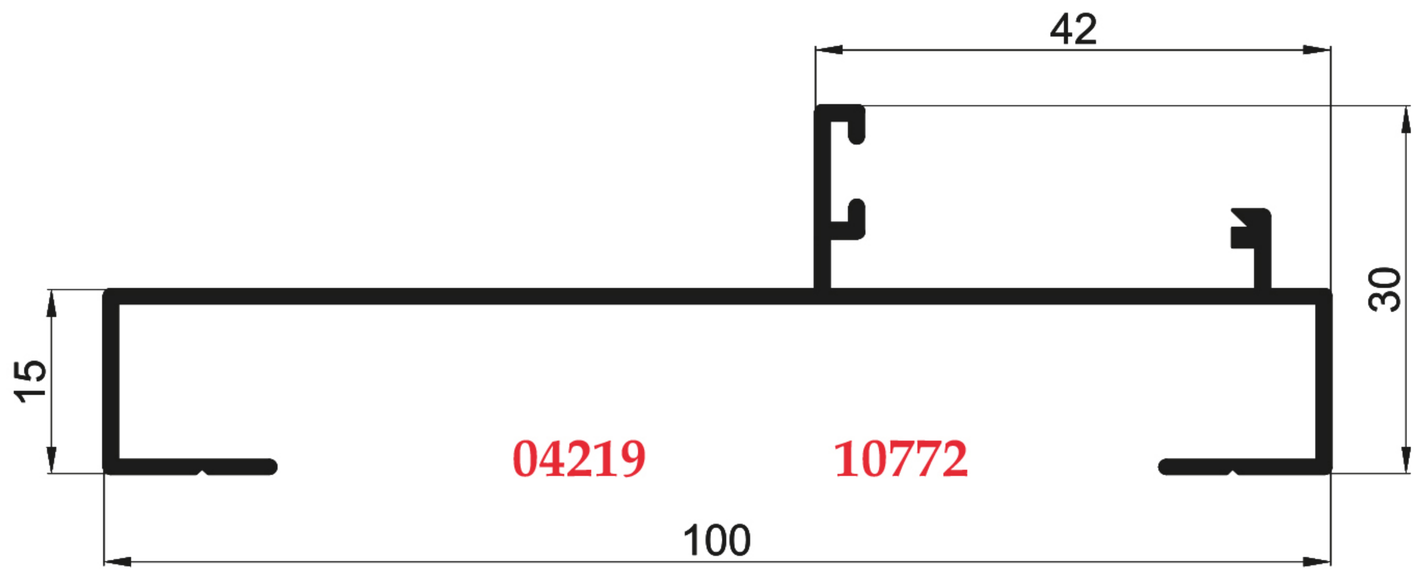

10cm Fix Frame With Out Overlap

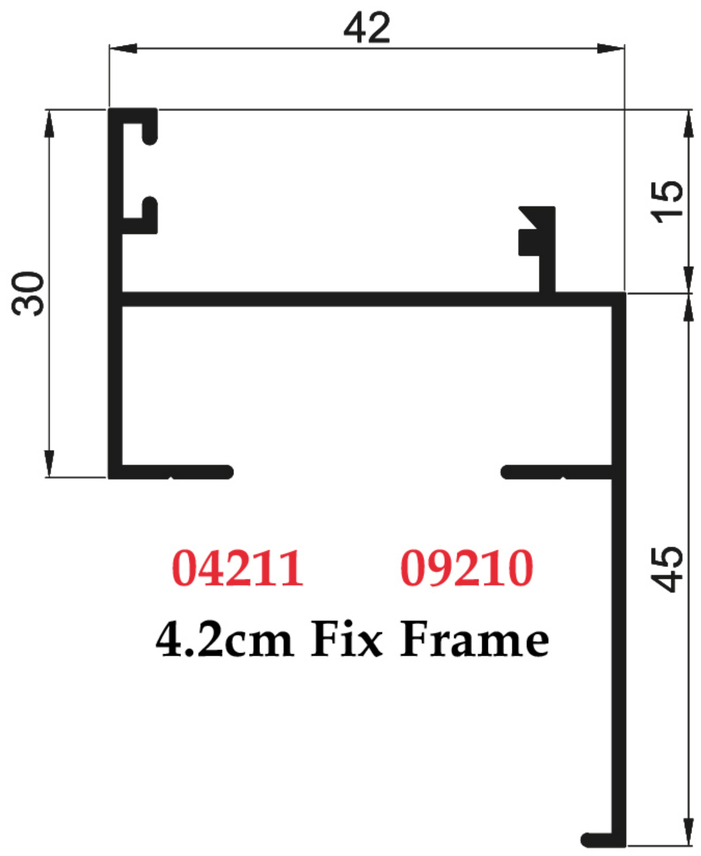

04211 09210

4.2cm Fix Frame

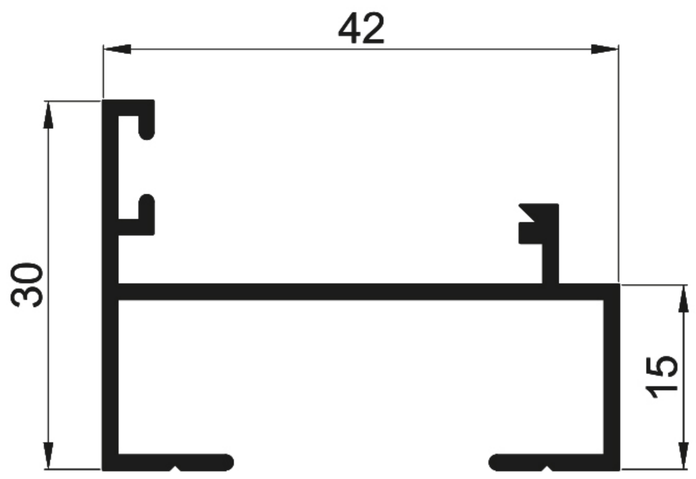

04213 09057

4.2cm Fix Frame
Without Overlap

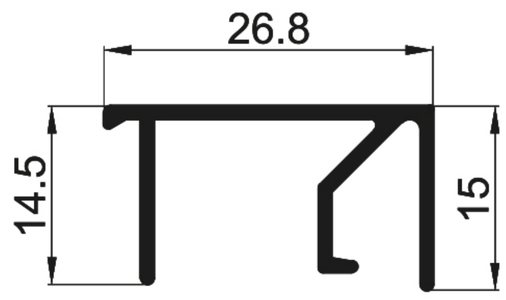

04221 09056

Berculase
Single Glass

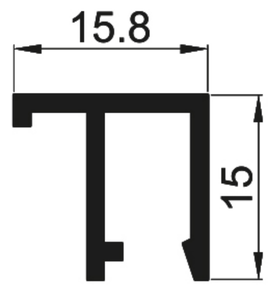

04223 09225

Berculase
Double Glass

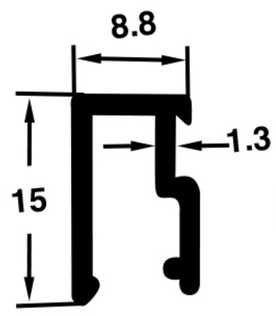

04224 11358

Small F Berculase

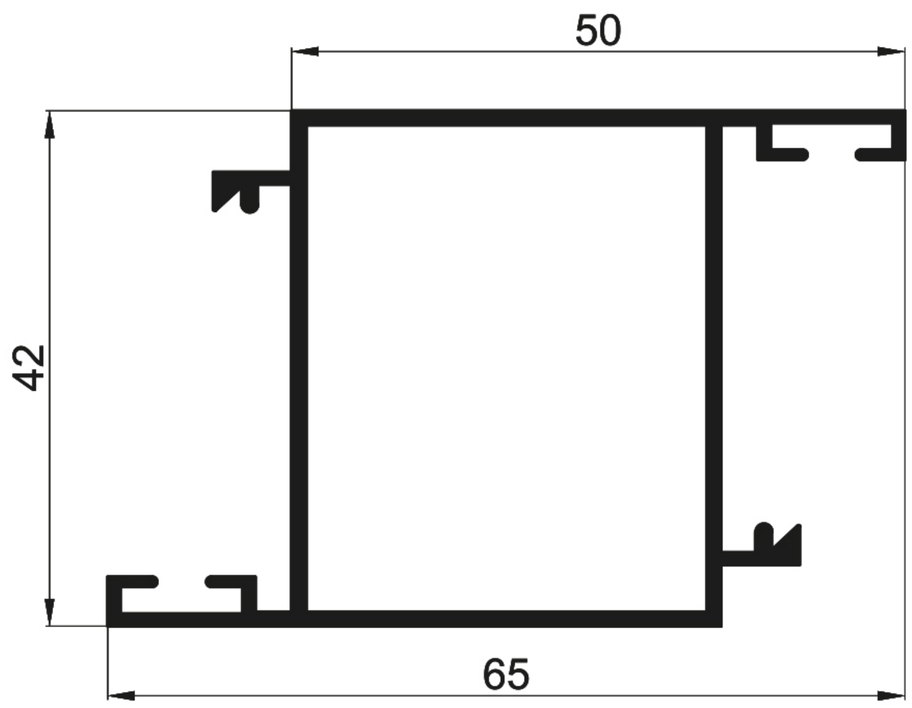

04203 12048

Medium Z

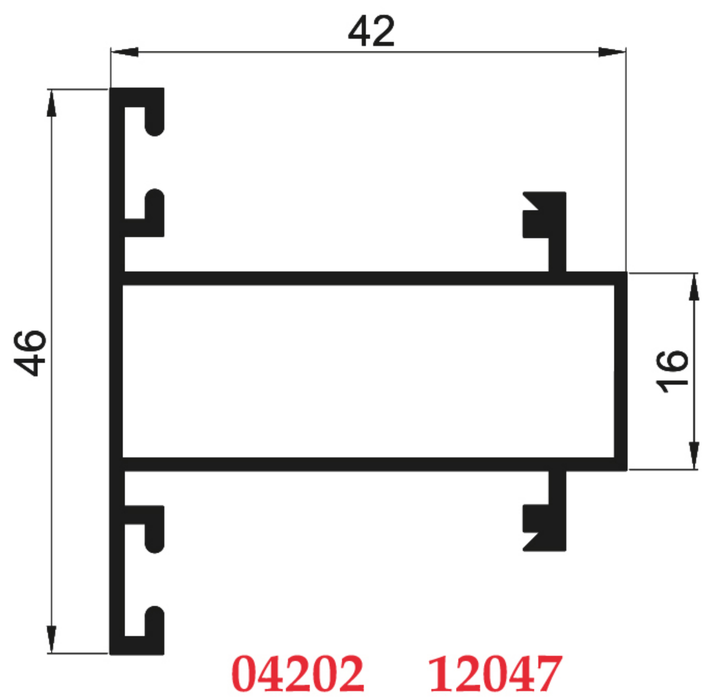

04202 12047

Small T

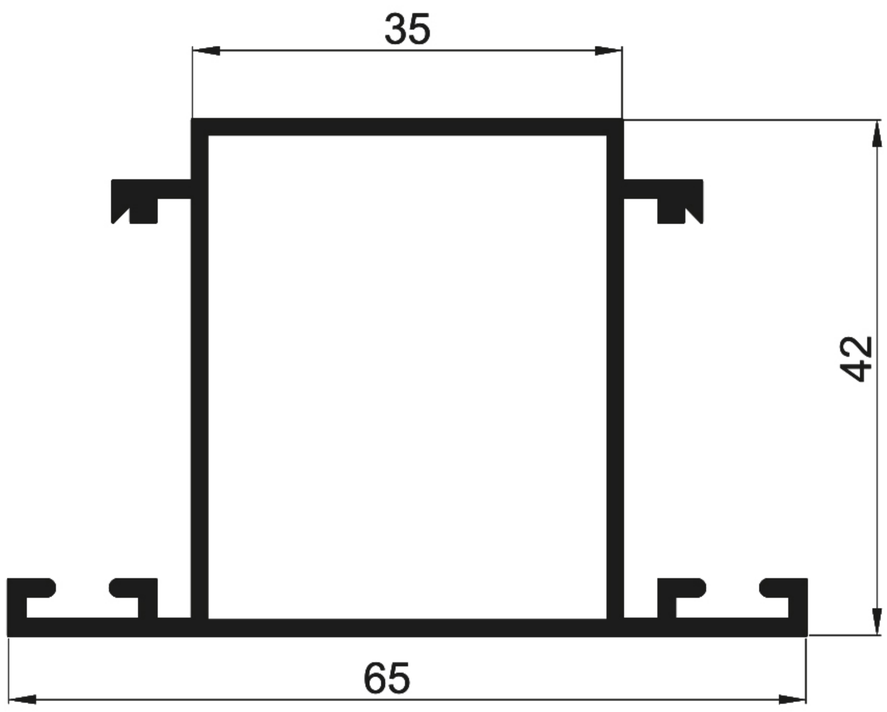

04204 12051

Medium T

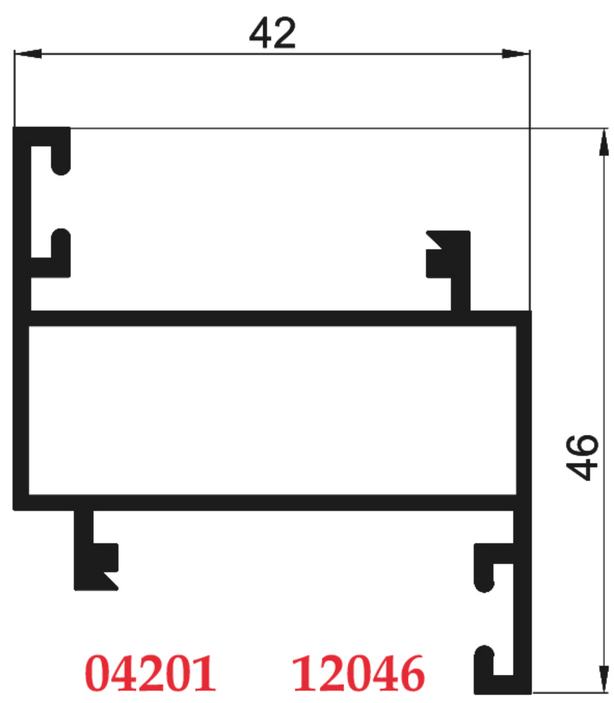

04201 12046

Small Z

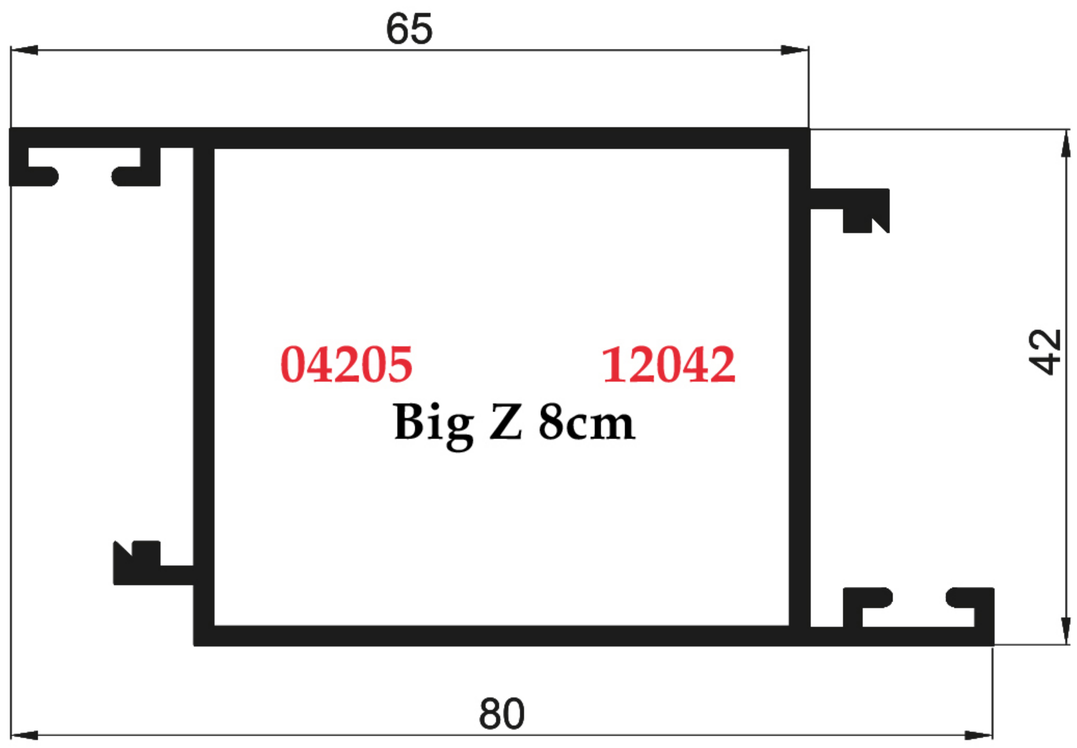
65
42
80
04205
12042
Big Z 8cm

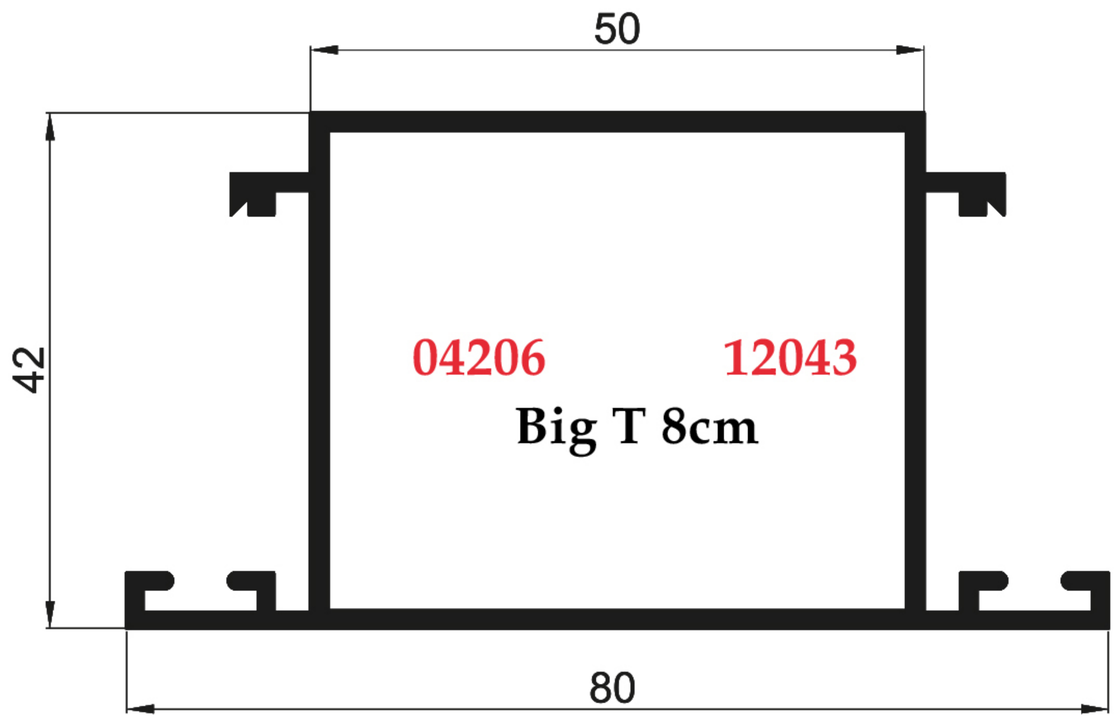
50
42
80
04206
12043
Big T 8cm

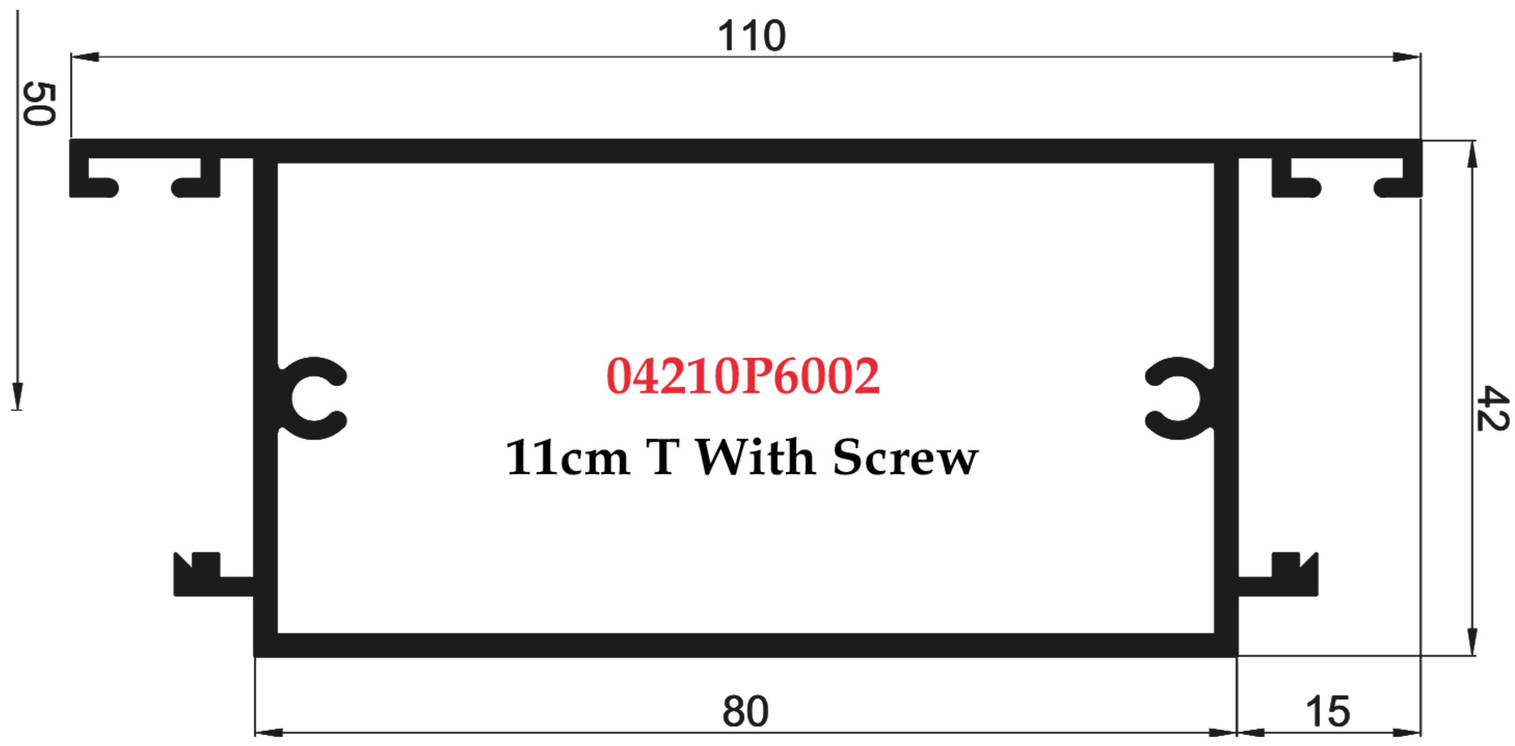
110
50
42
80
15
04210P6002
11cm T With Screw

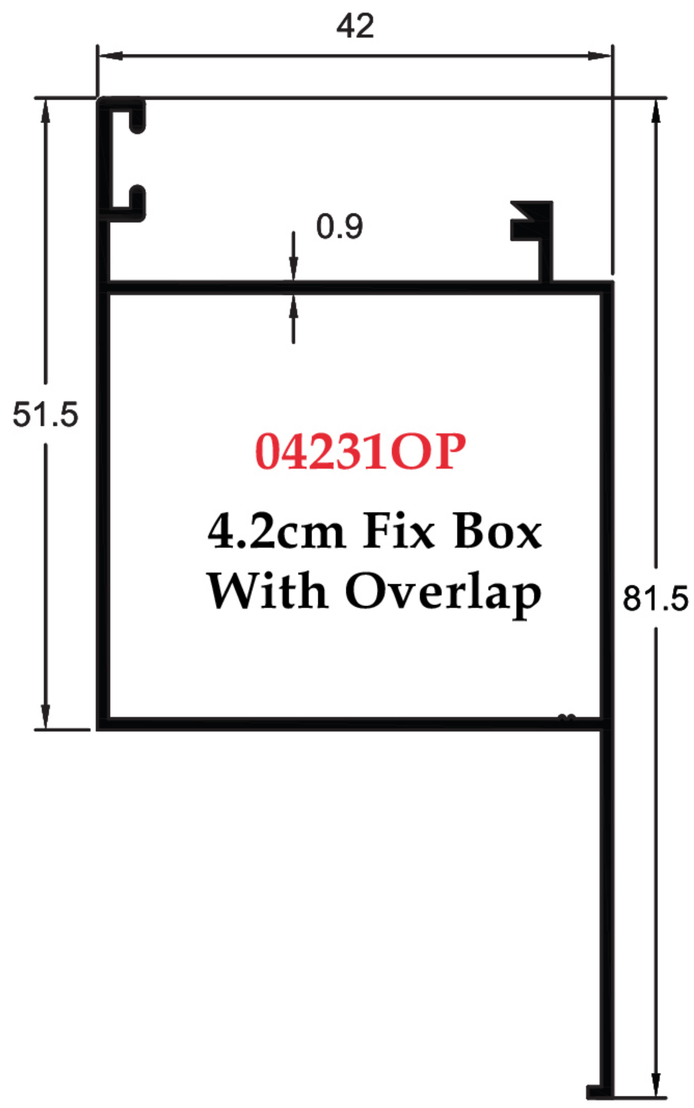
42
0.9
51.5
81.5
04231OP
4.2cm Fix Box
With Overlap

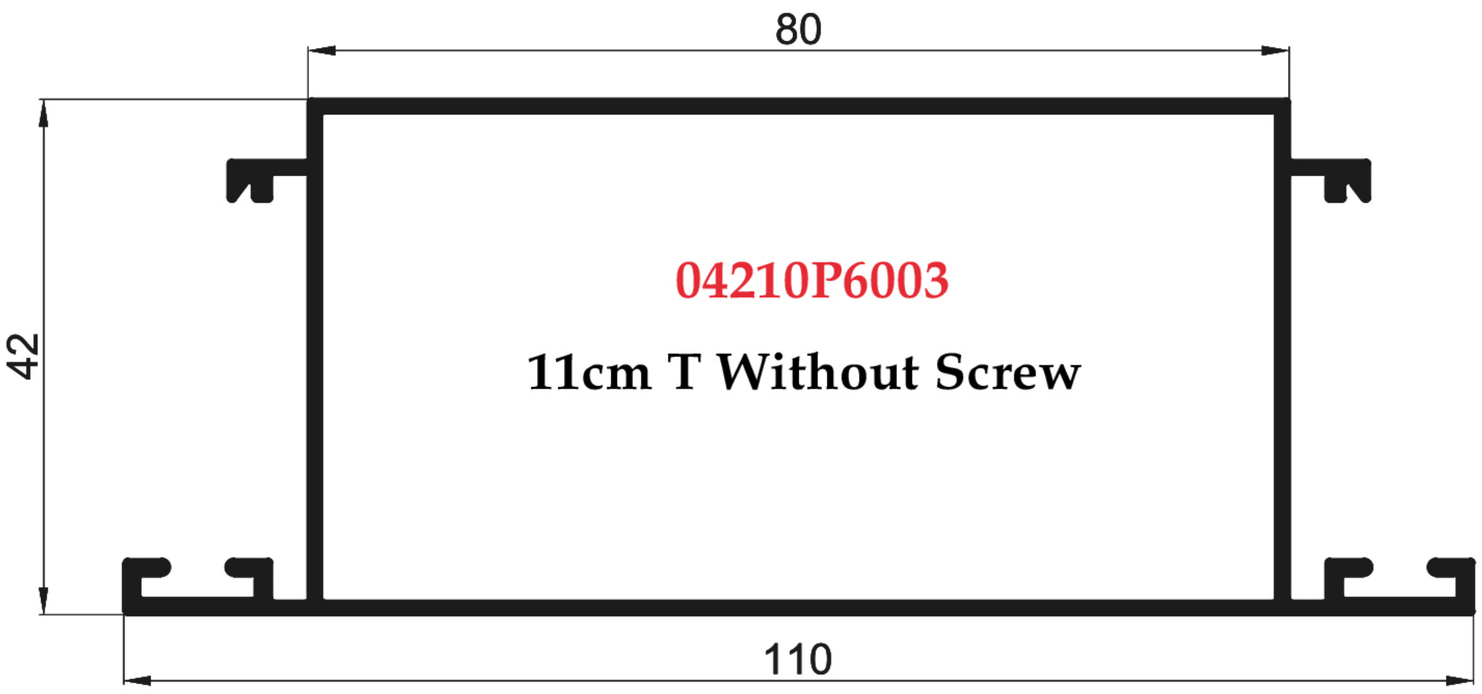
80
42
110
04210P6003
11cm T Without Screw

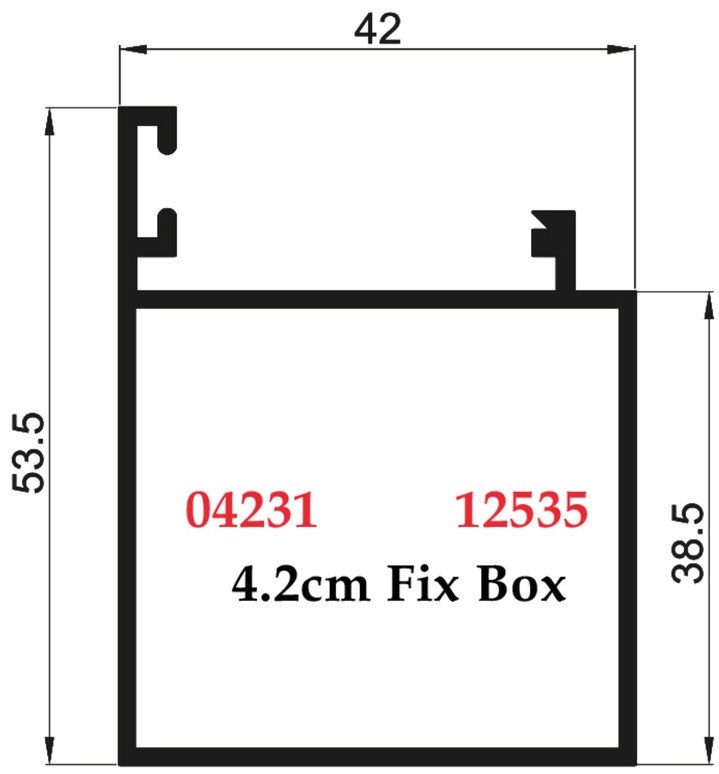
42
53.5
38.5
04231
12535
4.2cm Fix Box

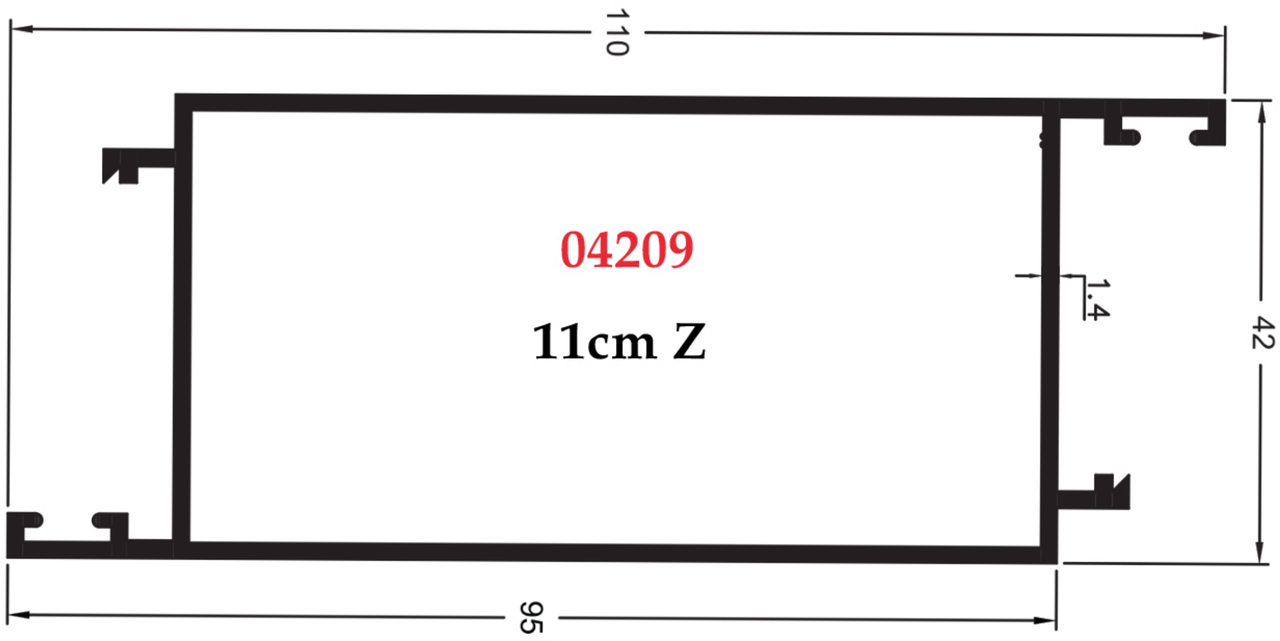
110
42
1.4
95
04209
11cm Z

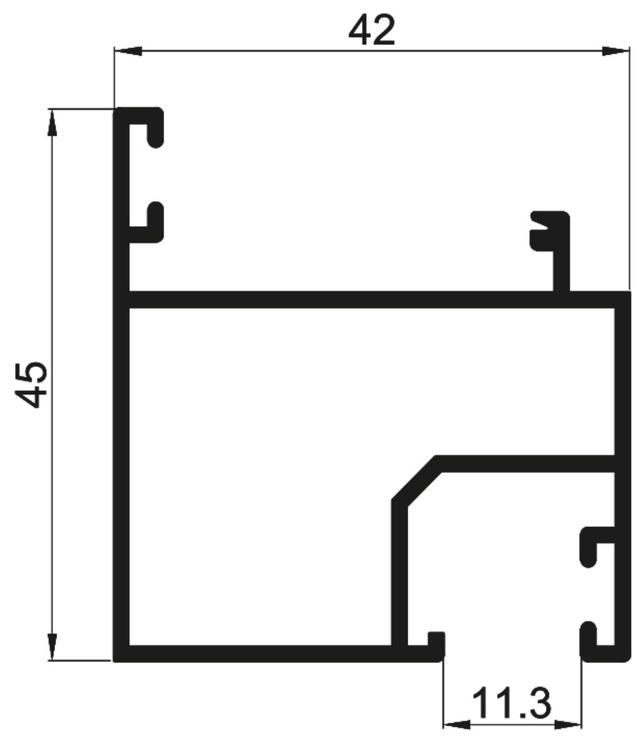

04207

Z Without Berculase

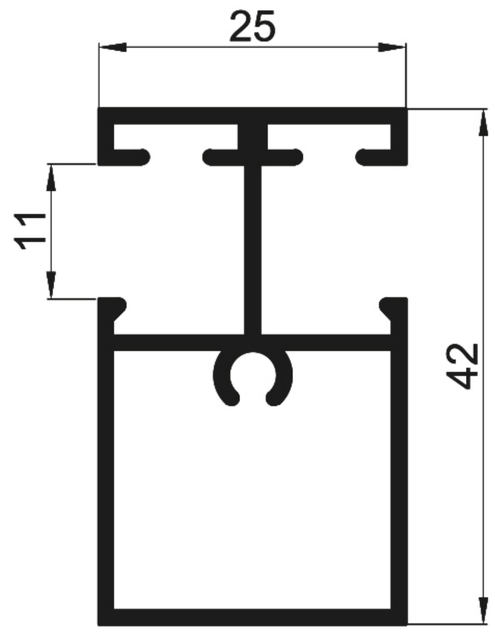

04226 13266

T Without Berculase

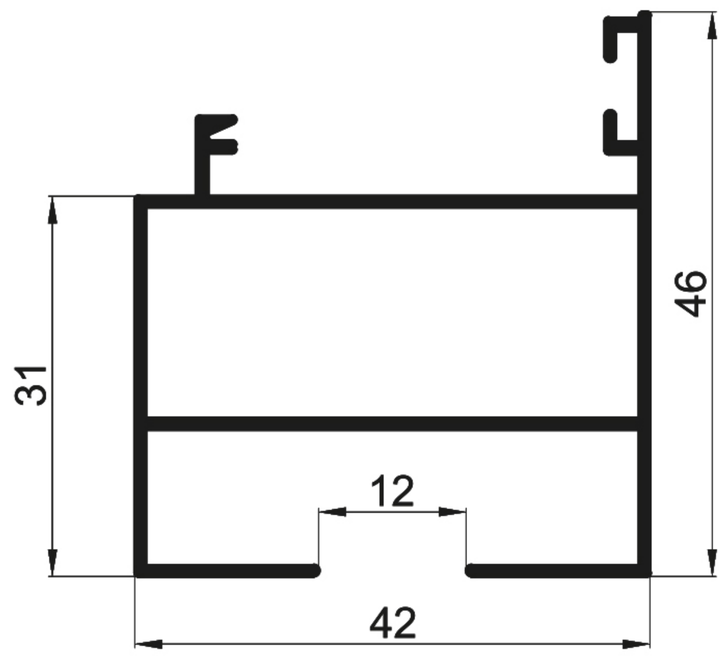

04275

42mm Window Shutter46mm

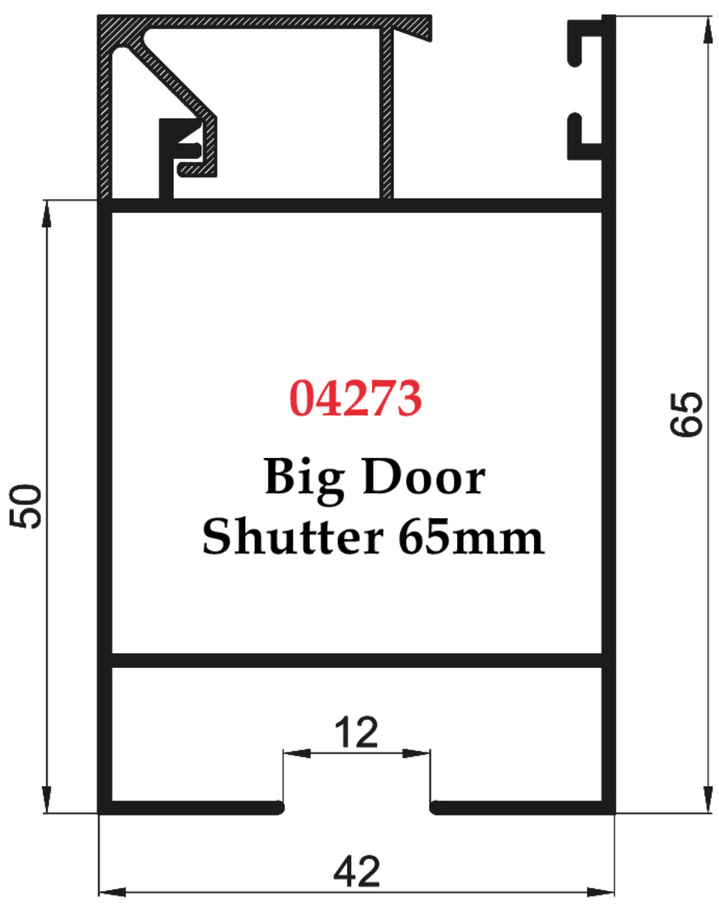

04273

Big Door Shutter 65mm

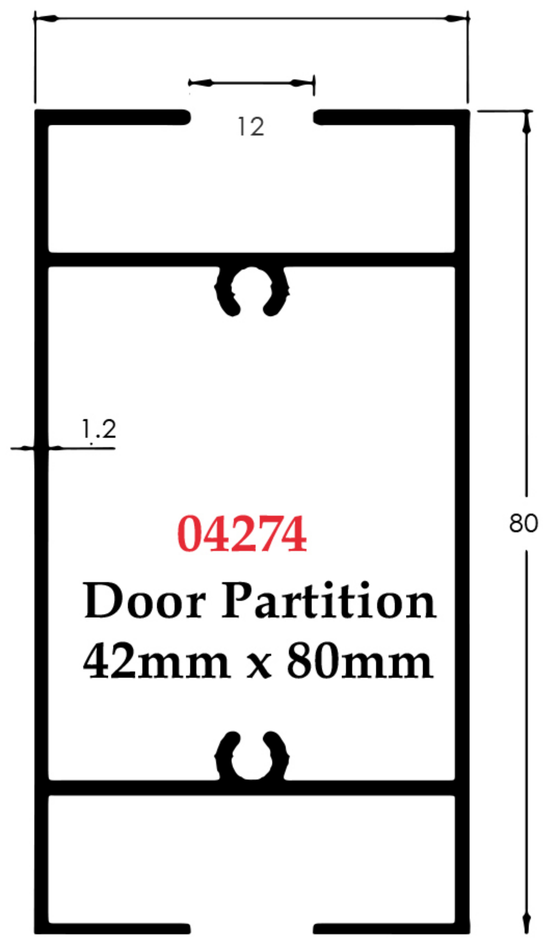

04274

Door Partition 42mm x 80mm

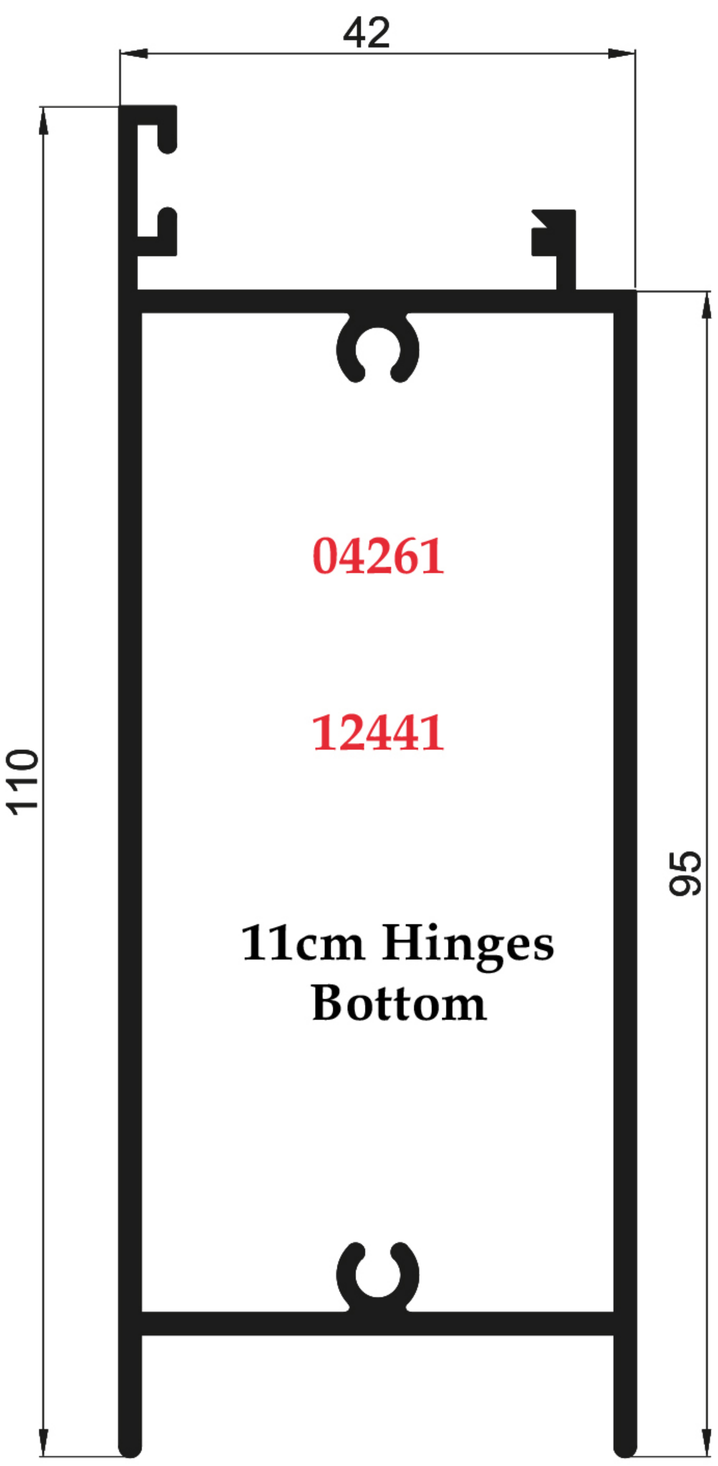

04261

12441

11cm Hinges Bottom

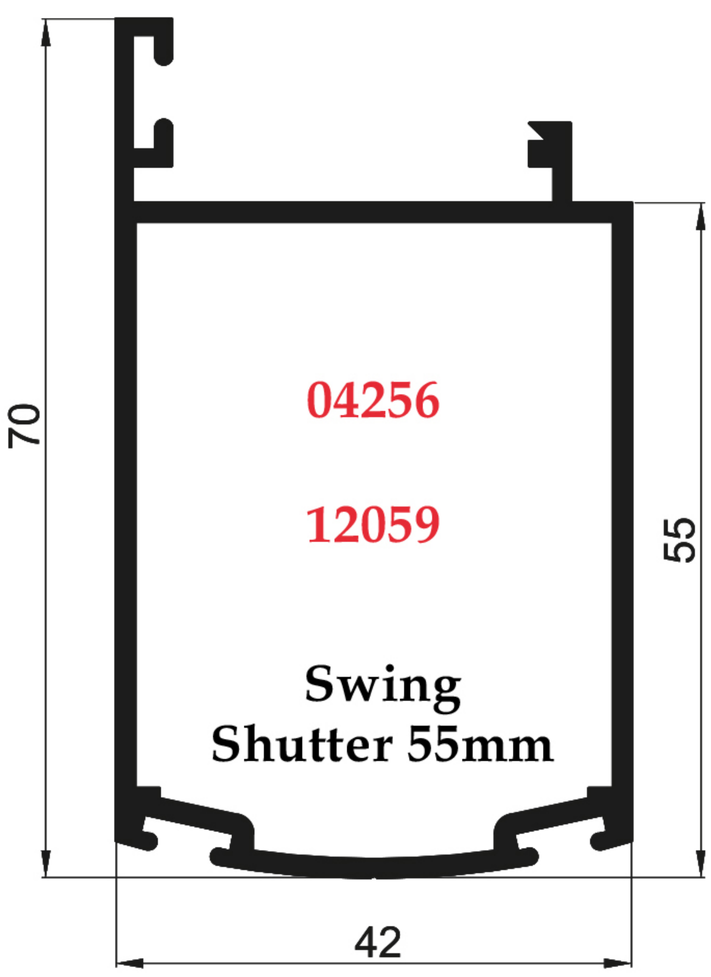

04256

12059

Swing Shutter 55mm

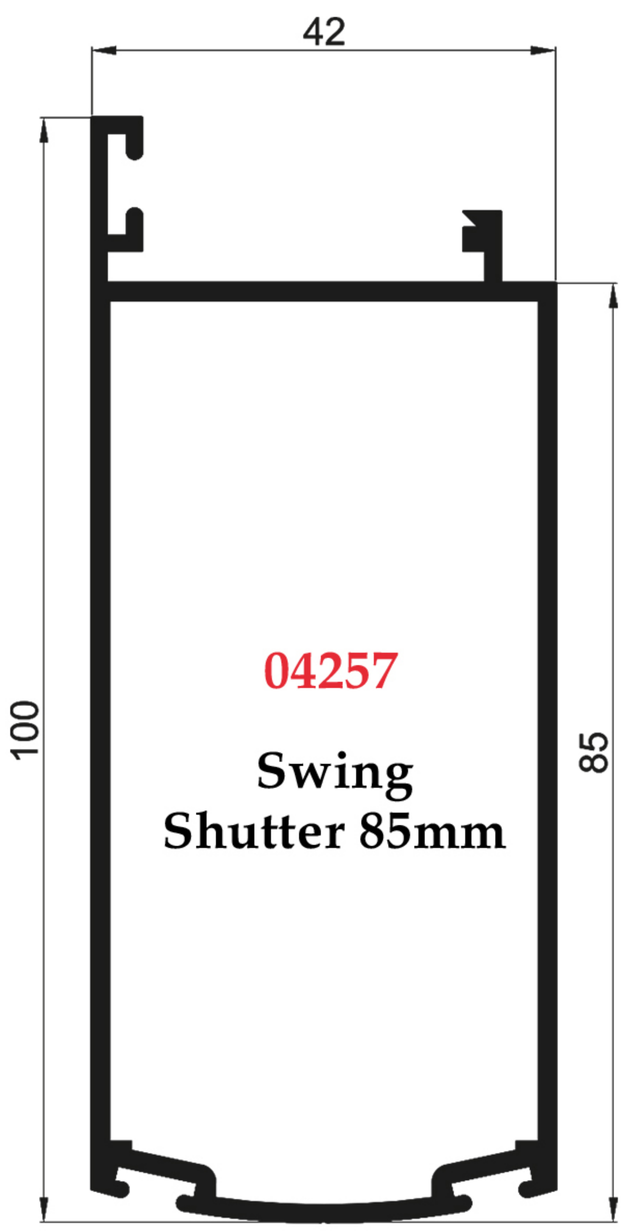

04257

Swing Shutter 85mm

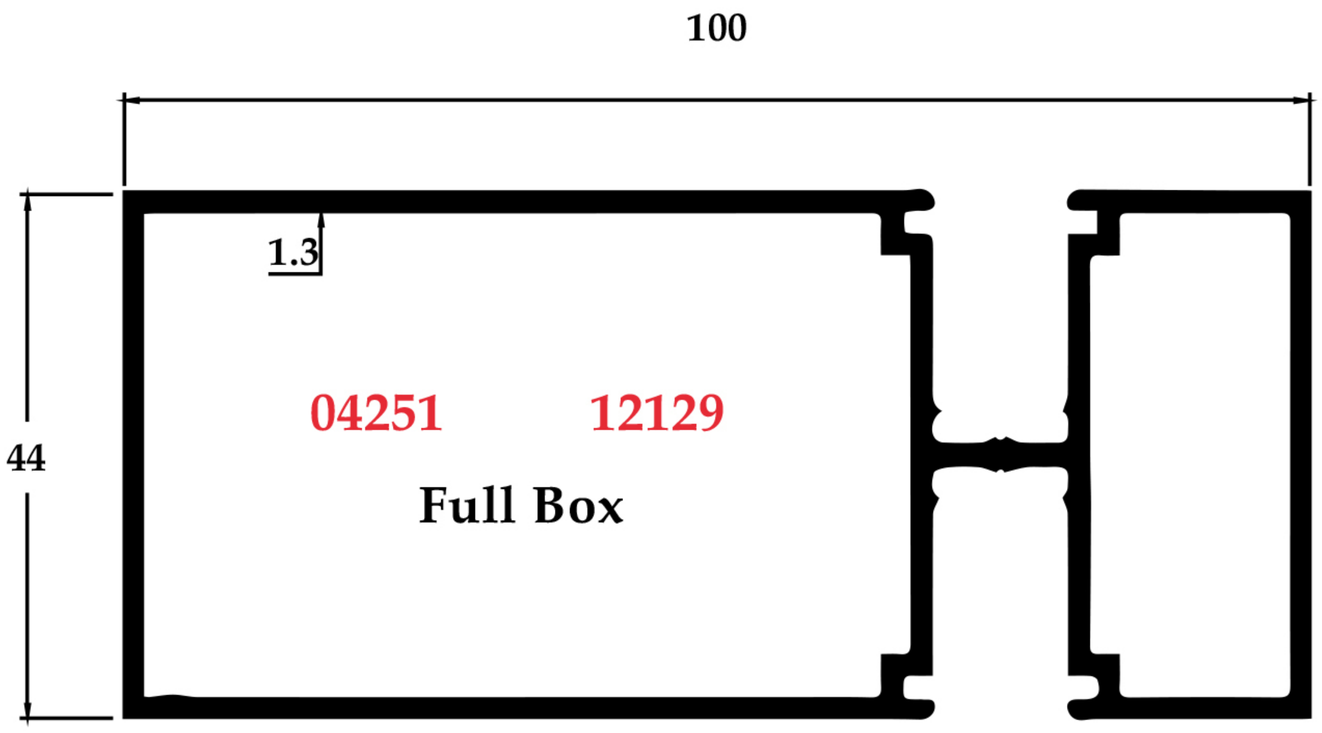

04251 12129

Full Box

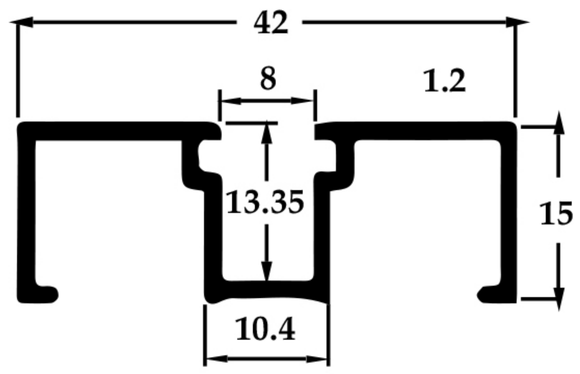

04276 10561

Small Arch Section

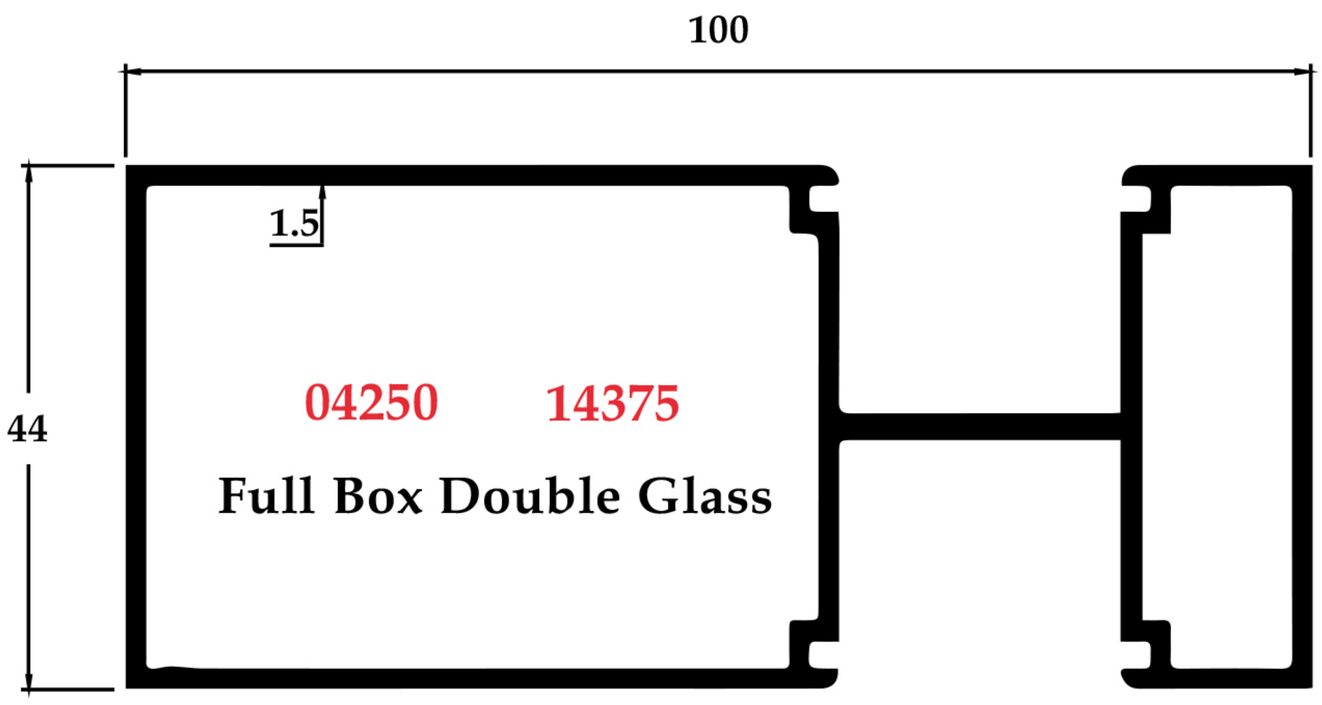

04250 14375

Full Box Double Glass

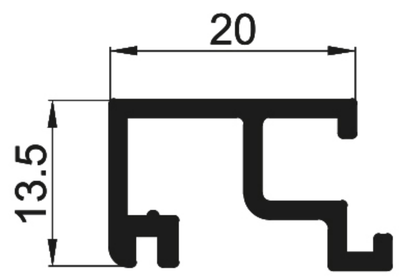

04258 09067

Swing Berculase

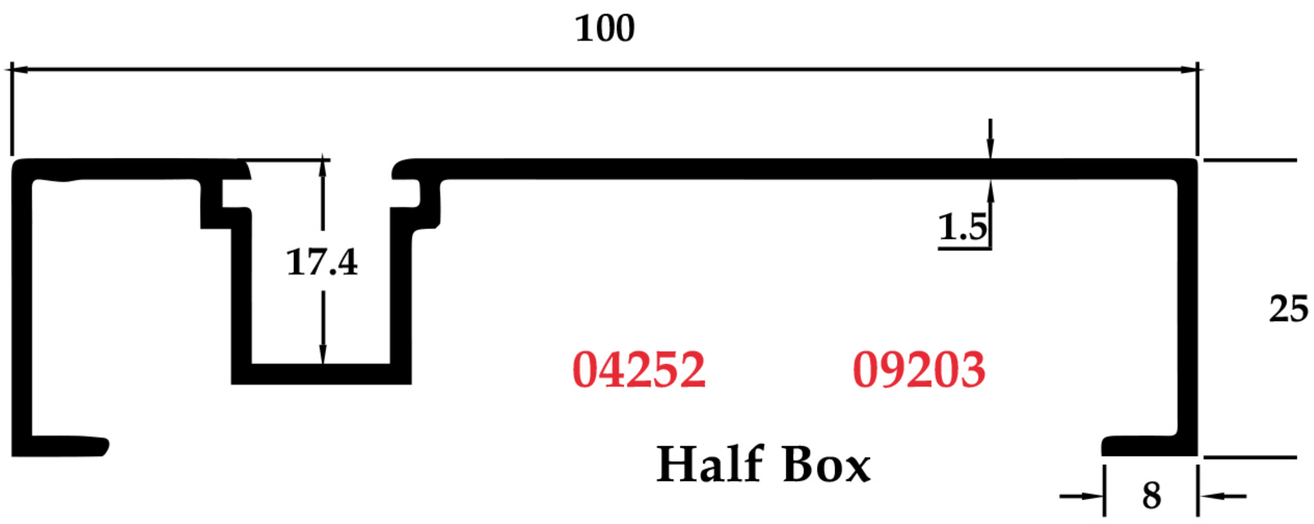

04252 09203

Half Box

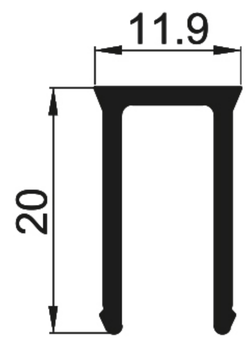

09154

U Fix With Full Box 12mm

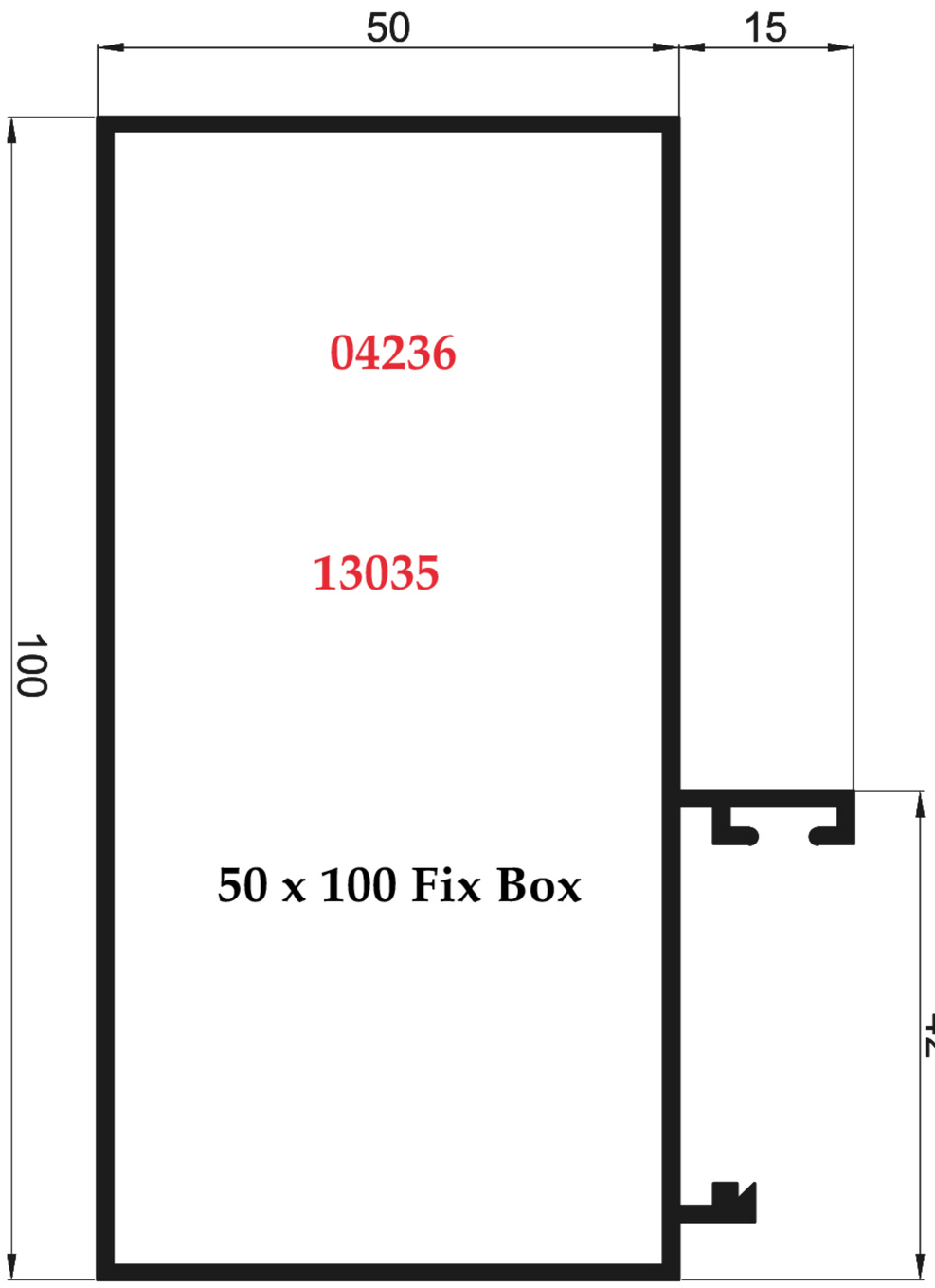
50
15
100
04236
13035
50 x 100 Fix Box
55
42

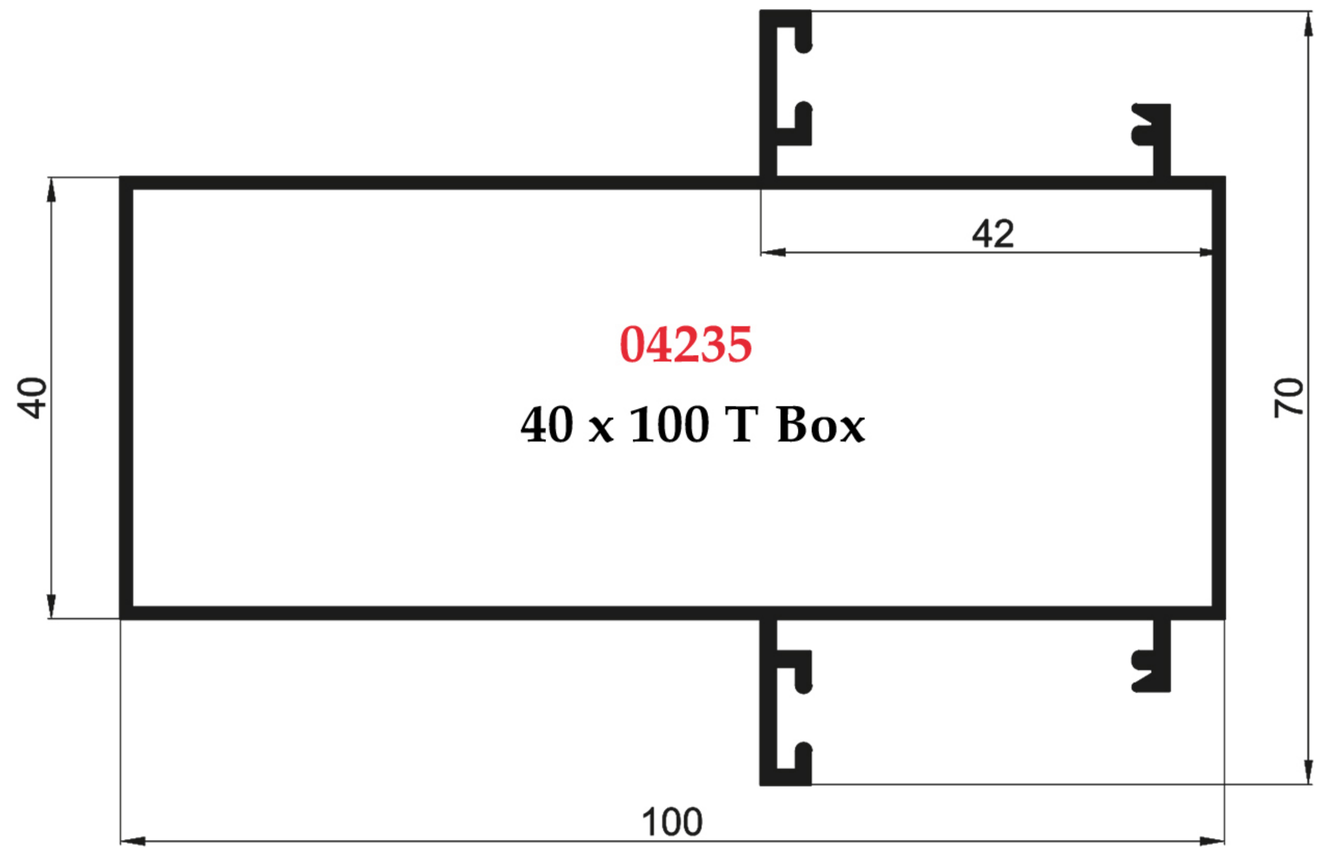
42
40
04235
40 x 100 T Box
70
100

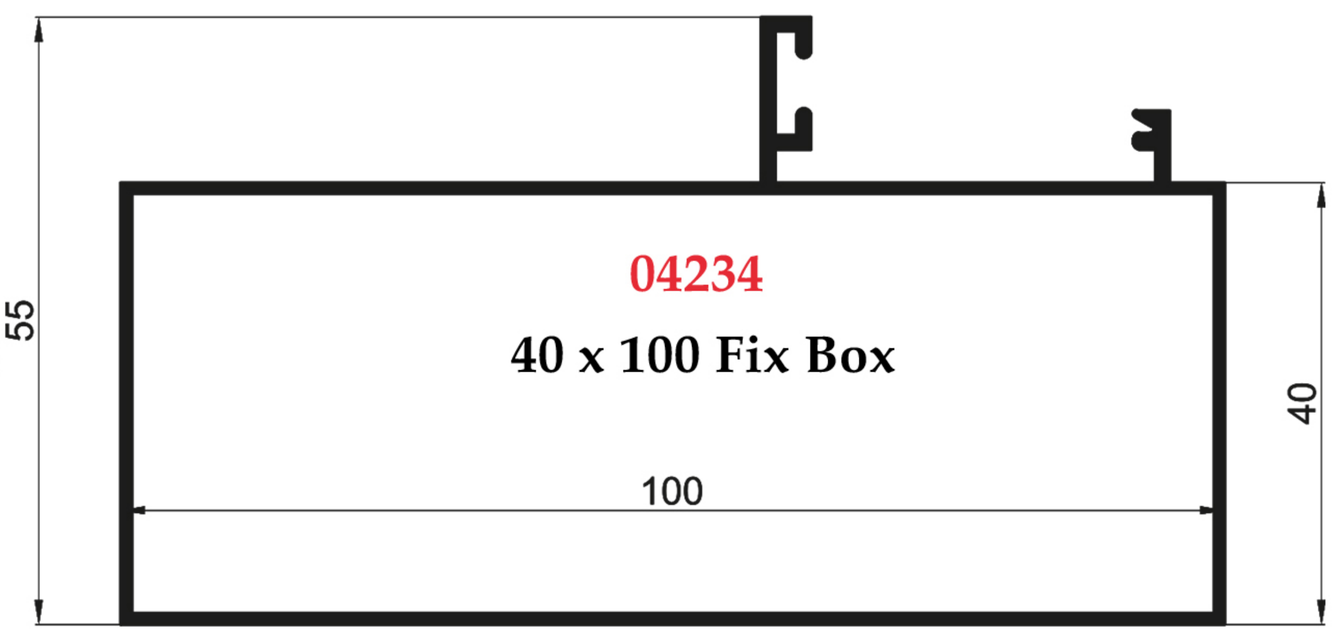
04234
40 x 100 Fix Box
100
40

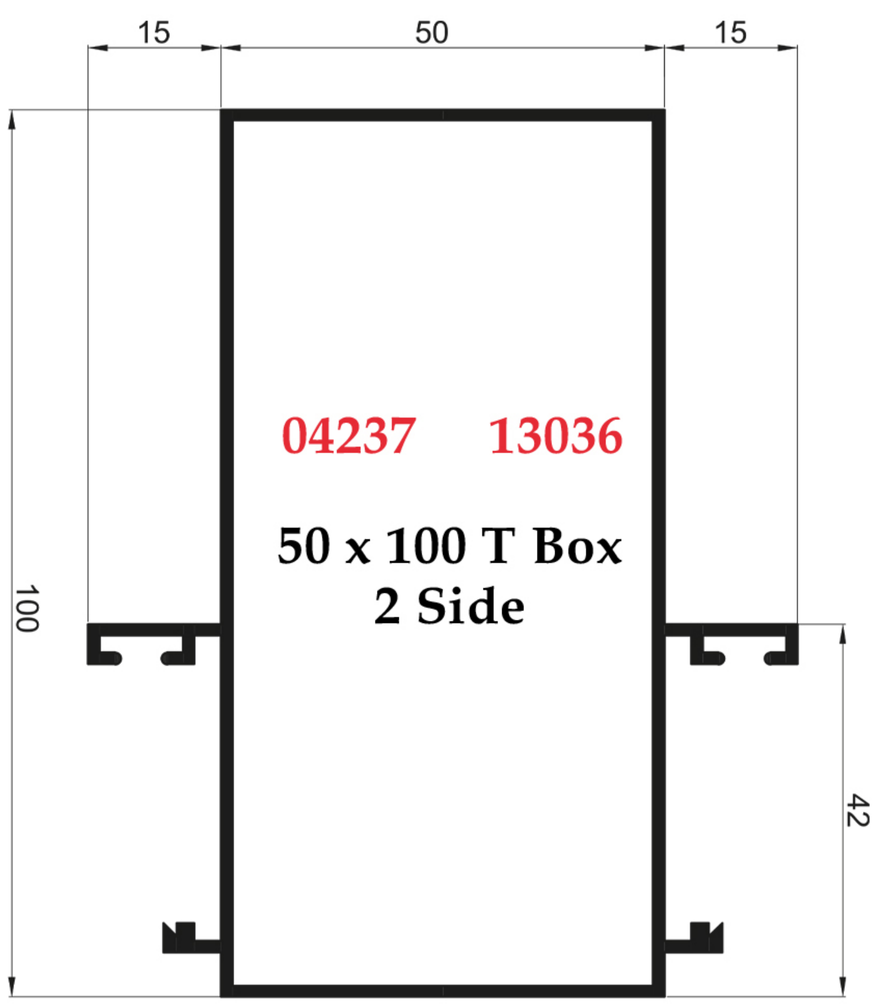
15
50
15
100
04237
13036
50 x 100 T Box
2 Side
42

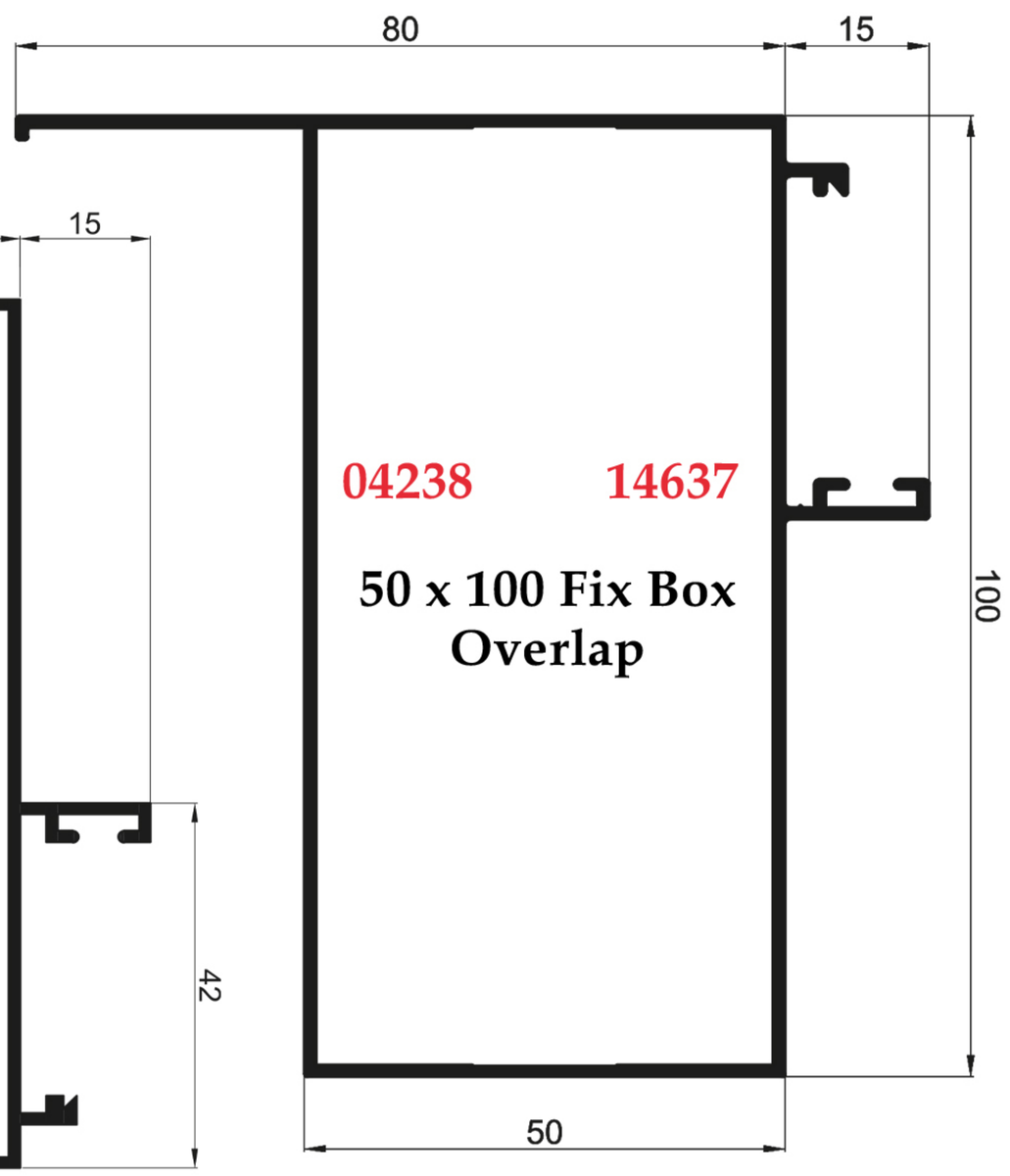
80
15
04238
14637
50 x 100 Fix Box
Overlap
100
50

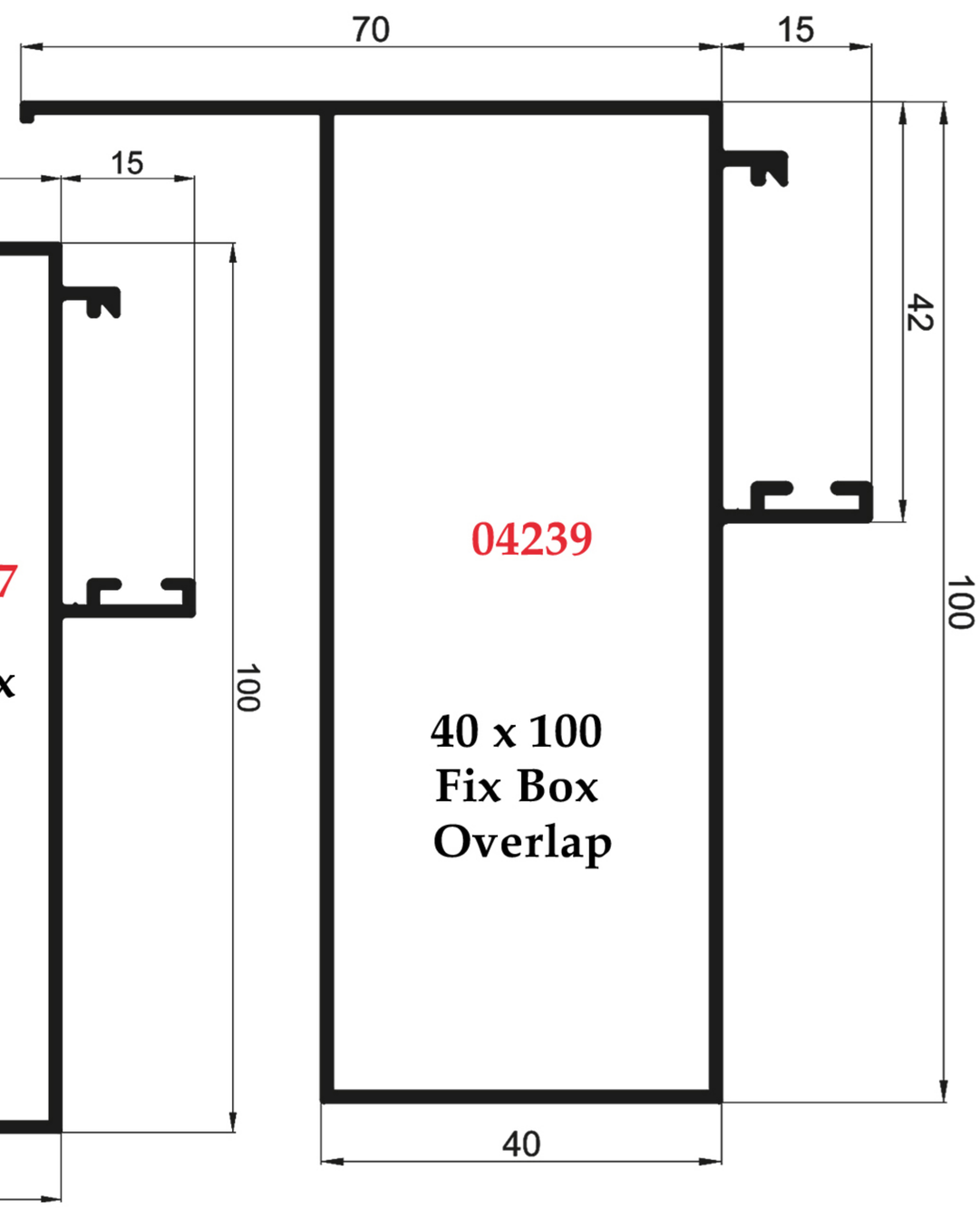
70
15
42
04239
40 x 100
Fix Box
Overlap
100
40

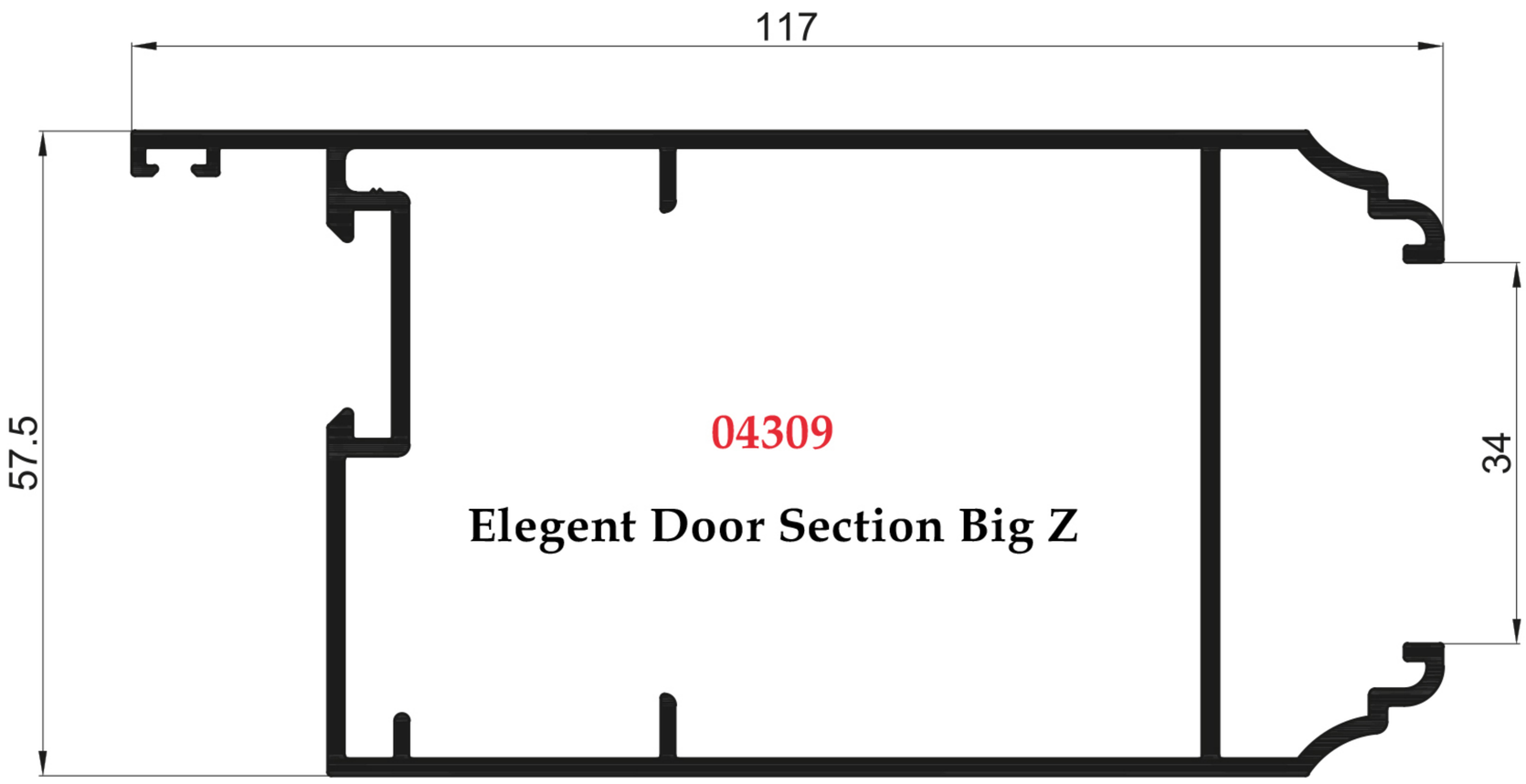
117
57.5
34
04309
Elegent Door Section Big Z

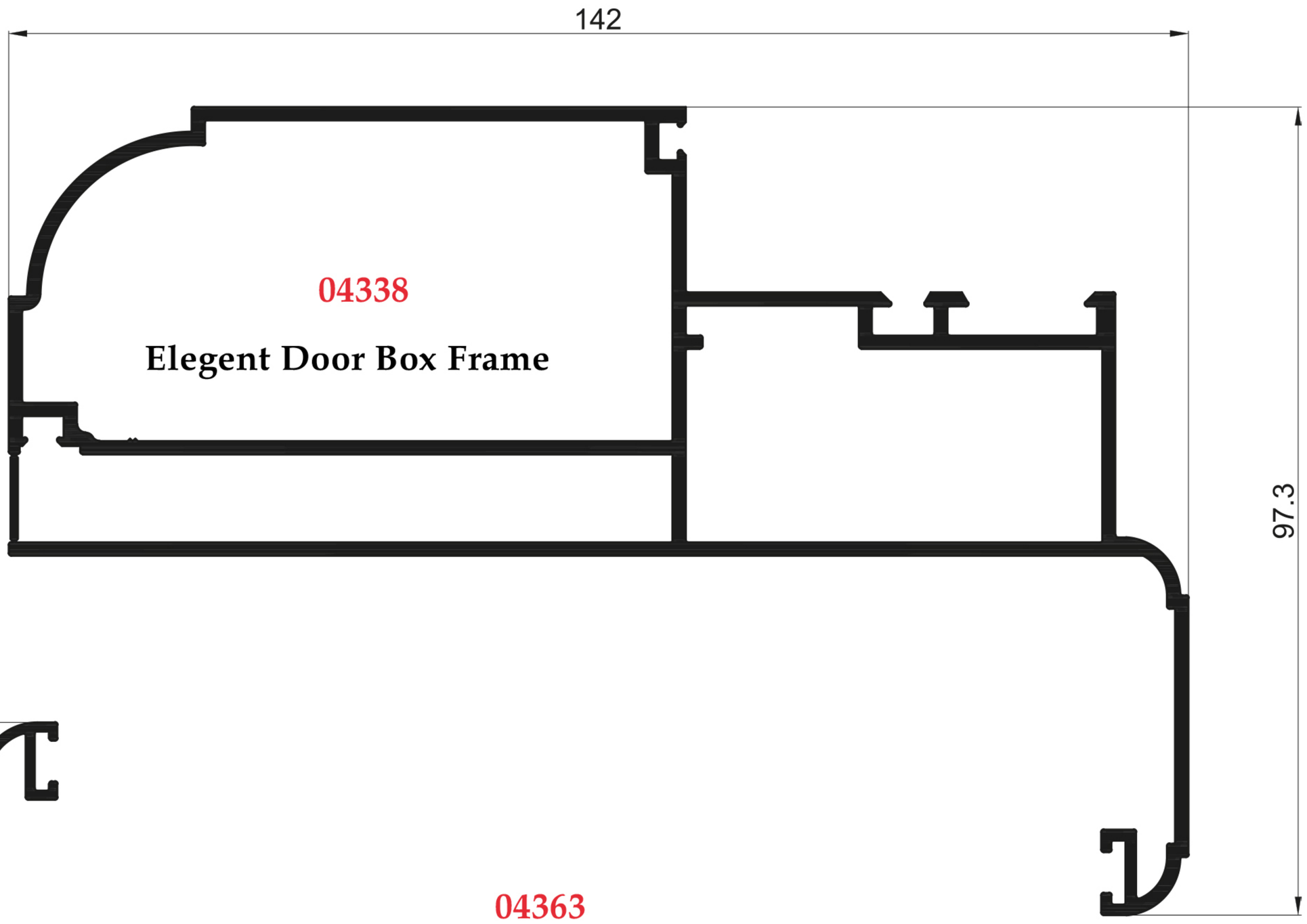
142
97.3
04338
Elegent Door Box Frame

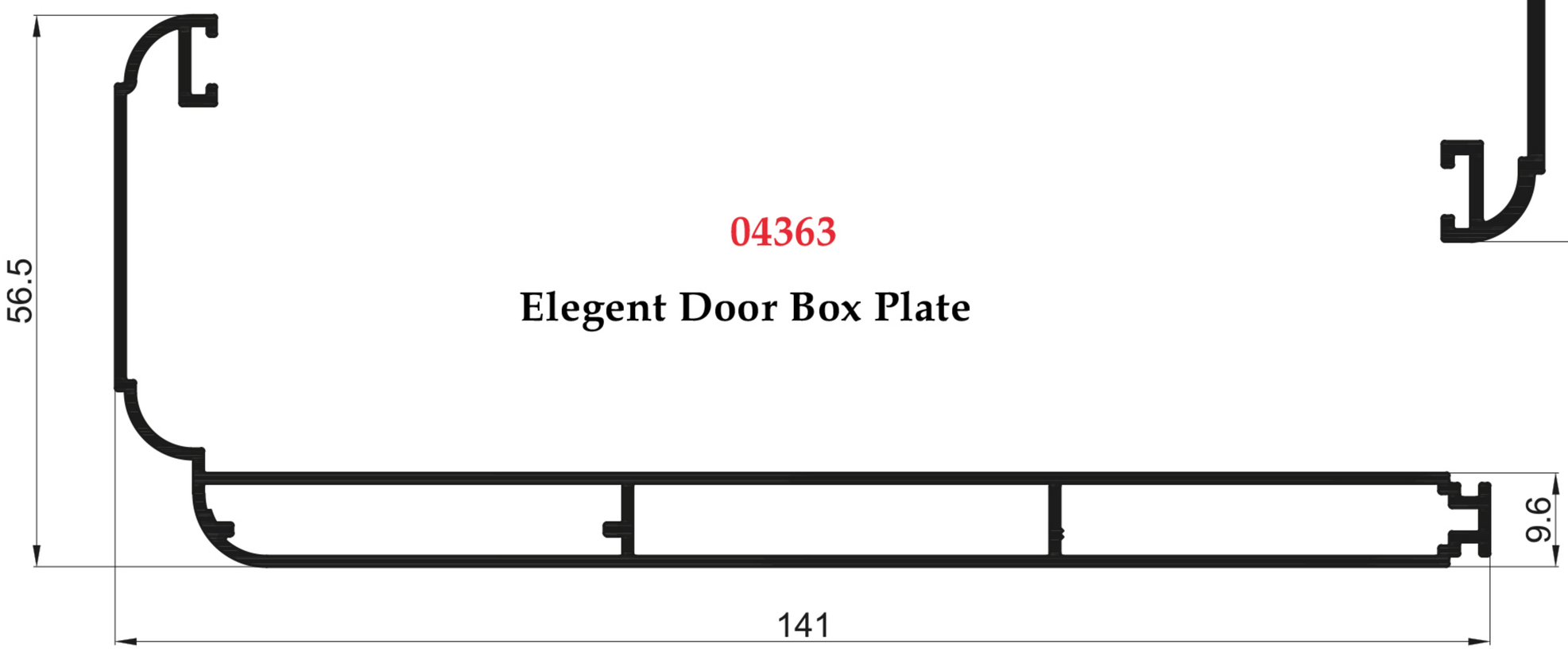
56.5
9.6
141
04363
Elegent Door Box Plate

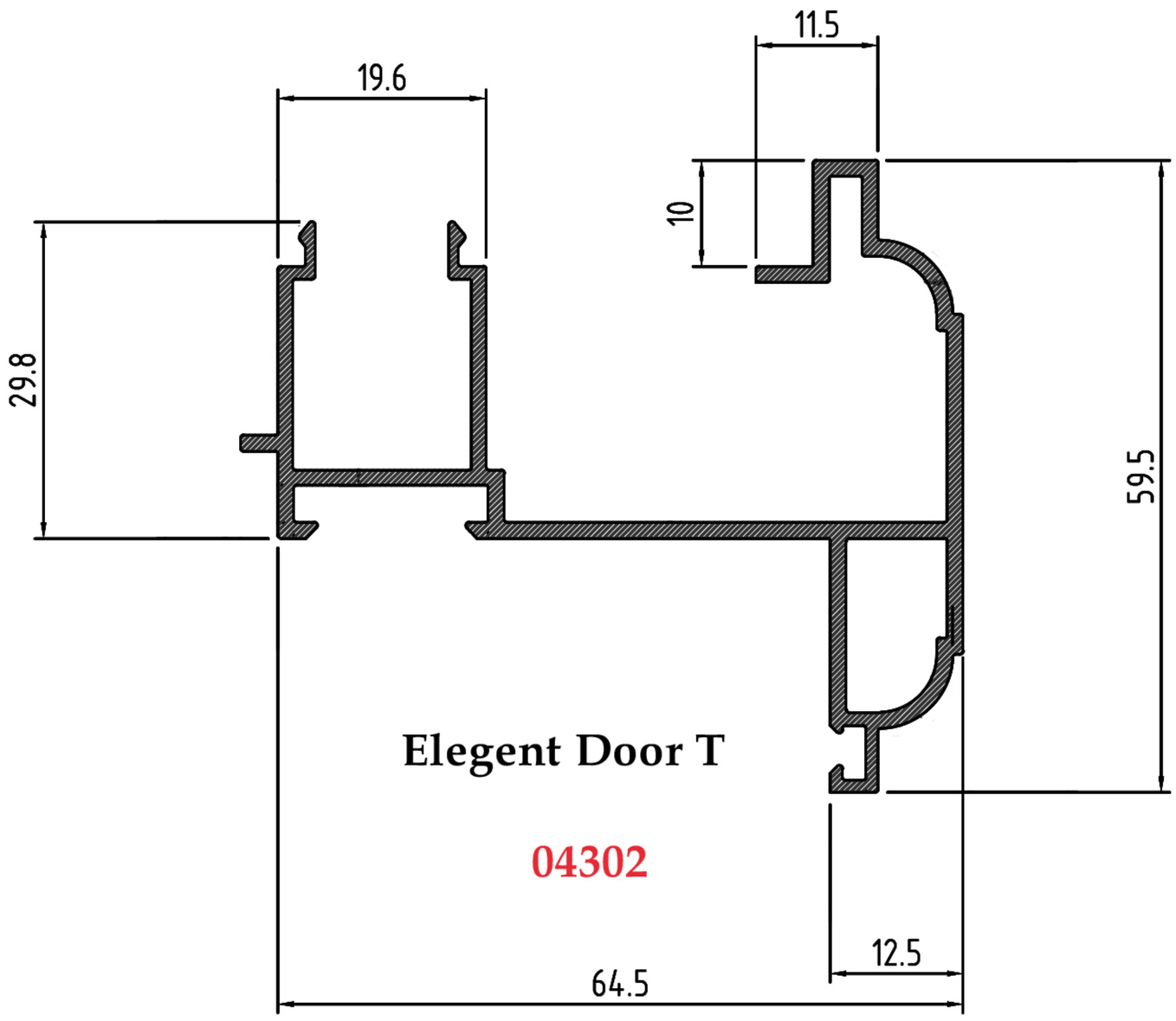

Elegent Door T

04302

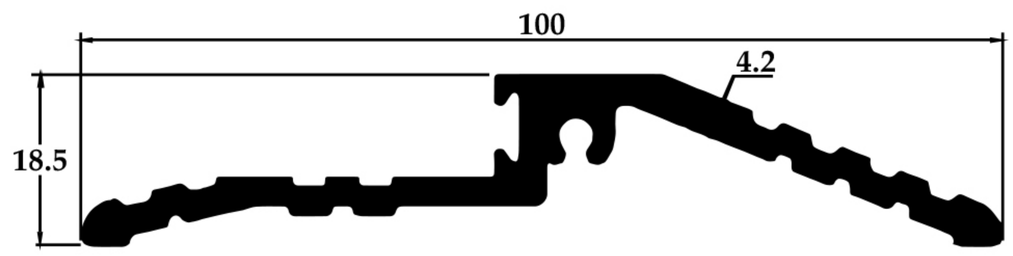

04361

Elegent Door Bottom

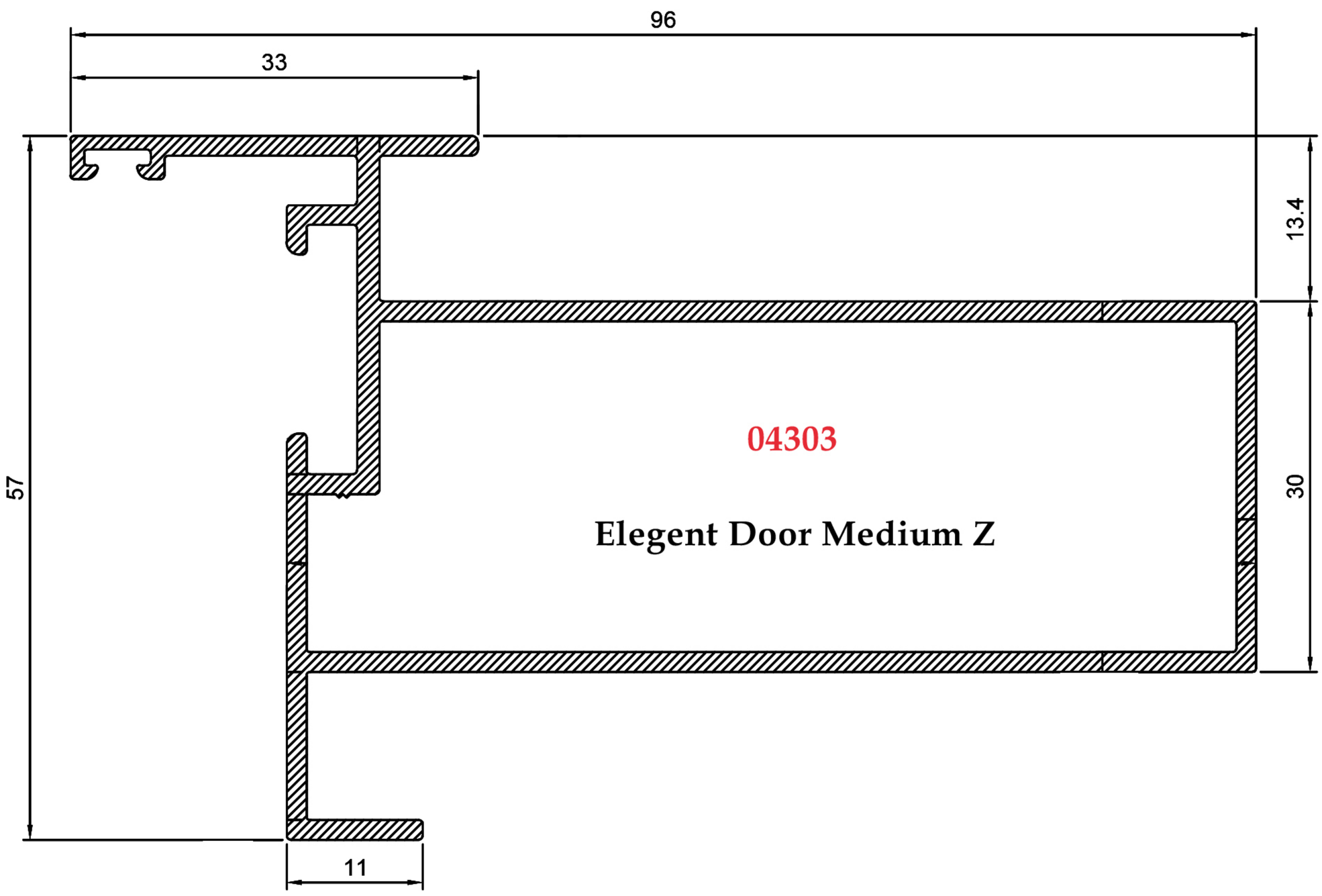

04303

Elegent Door Medium Z

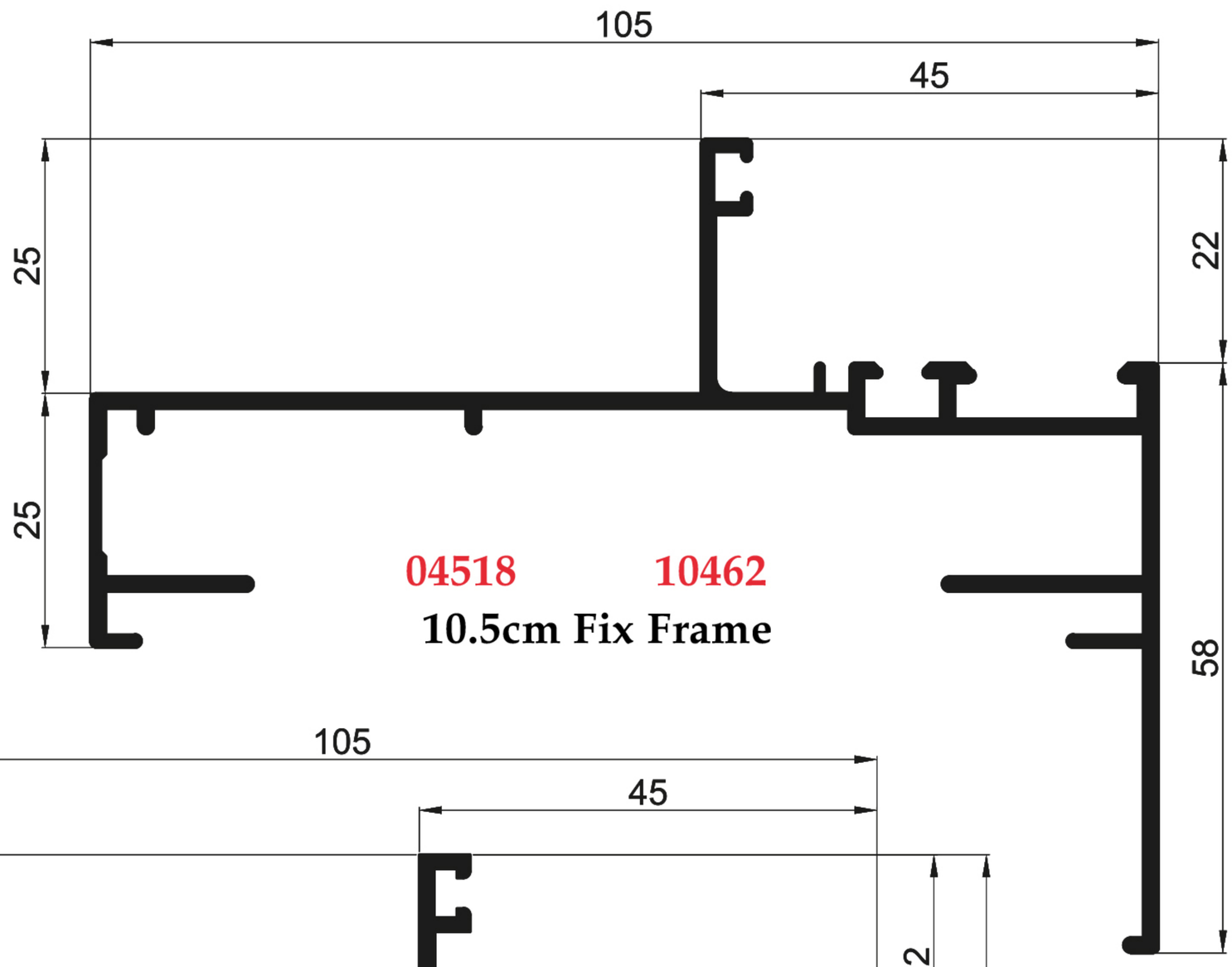

04518 10462

10.5cm Fix Frame

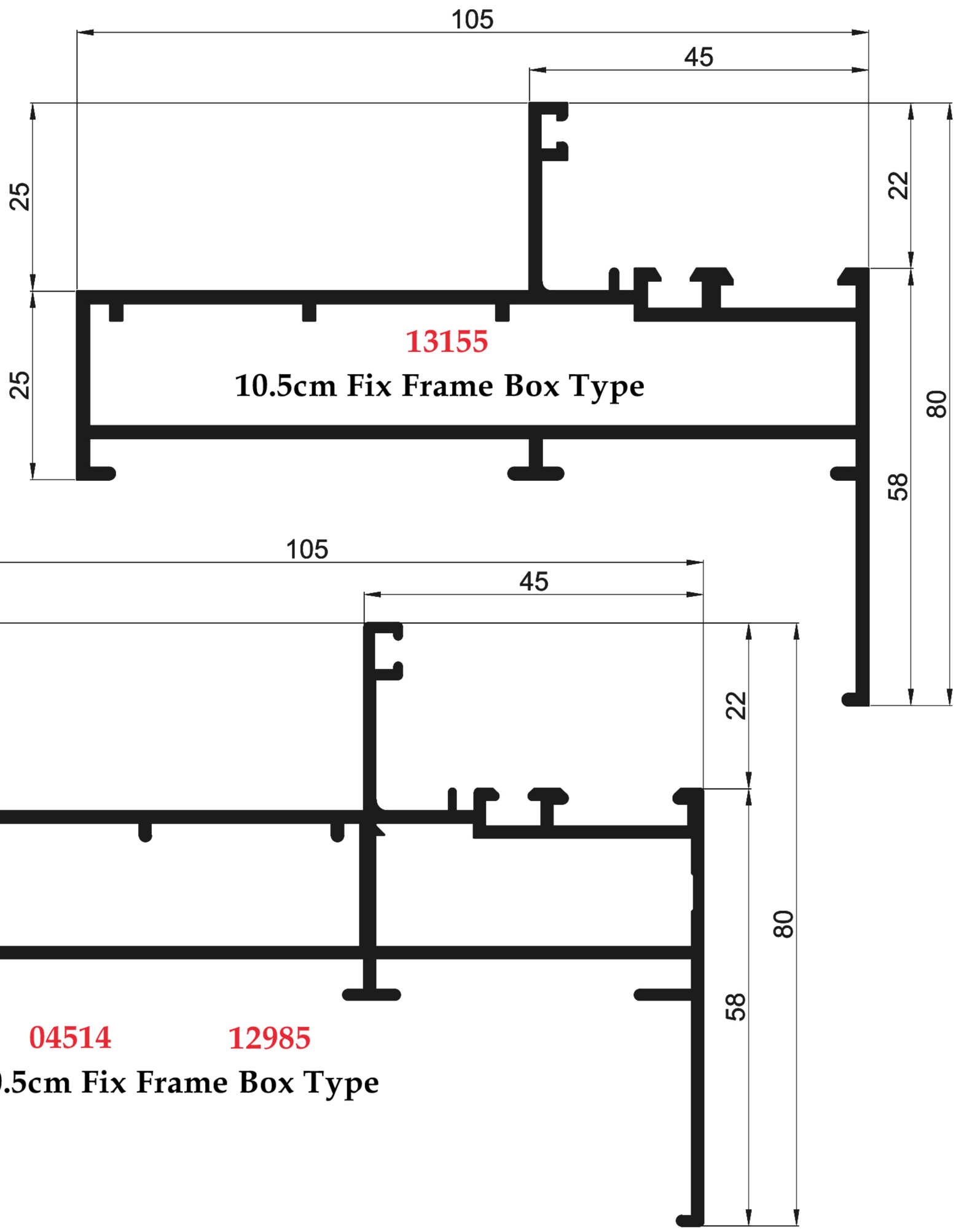

13155

10.5cm Fix Frame Box Type

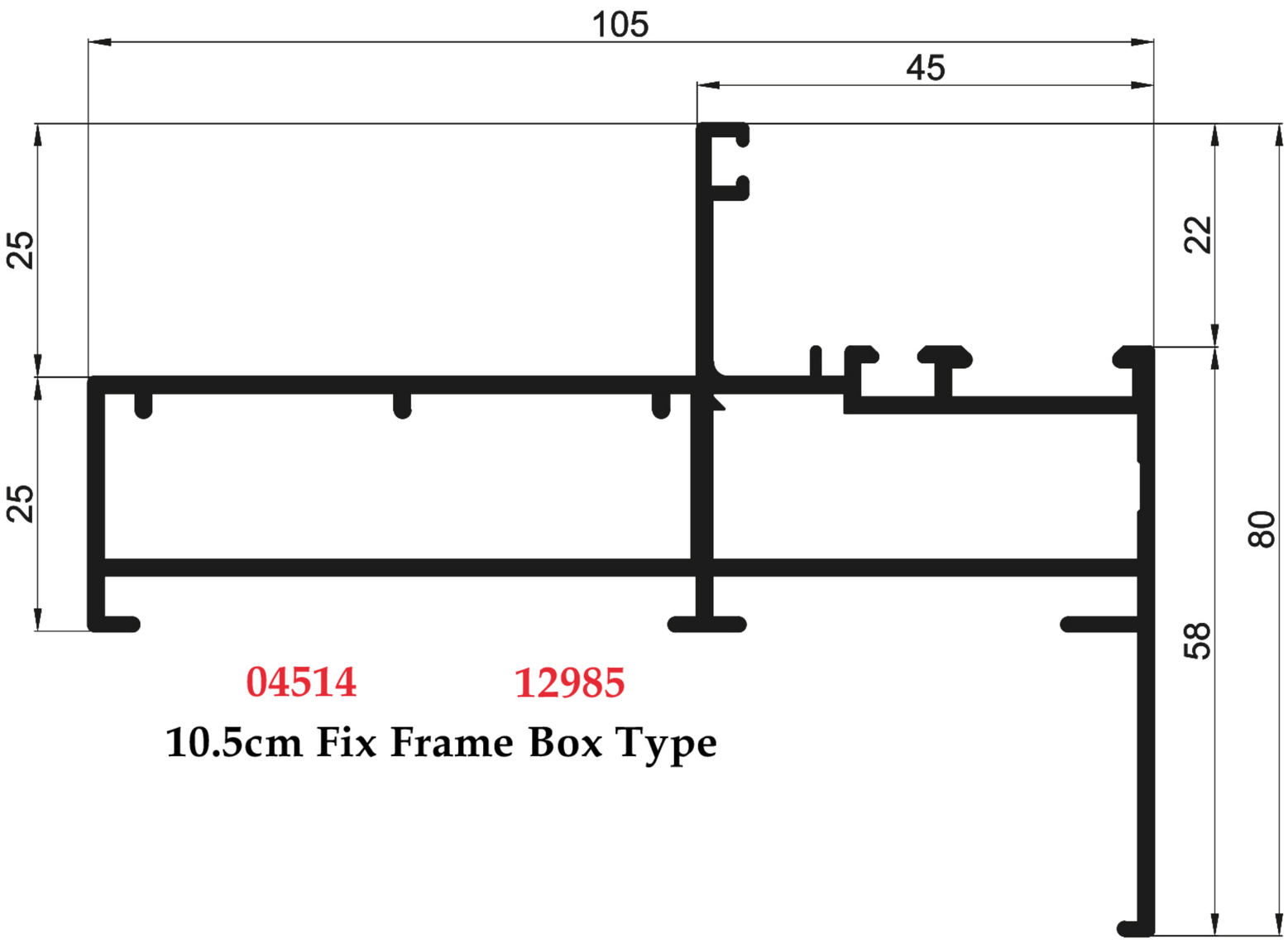

04514 12985

10.5cm Fix Frame Box Type

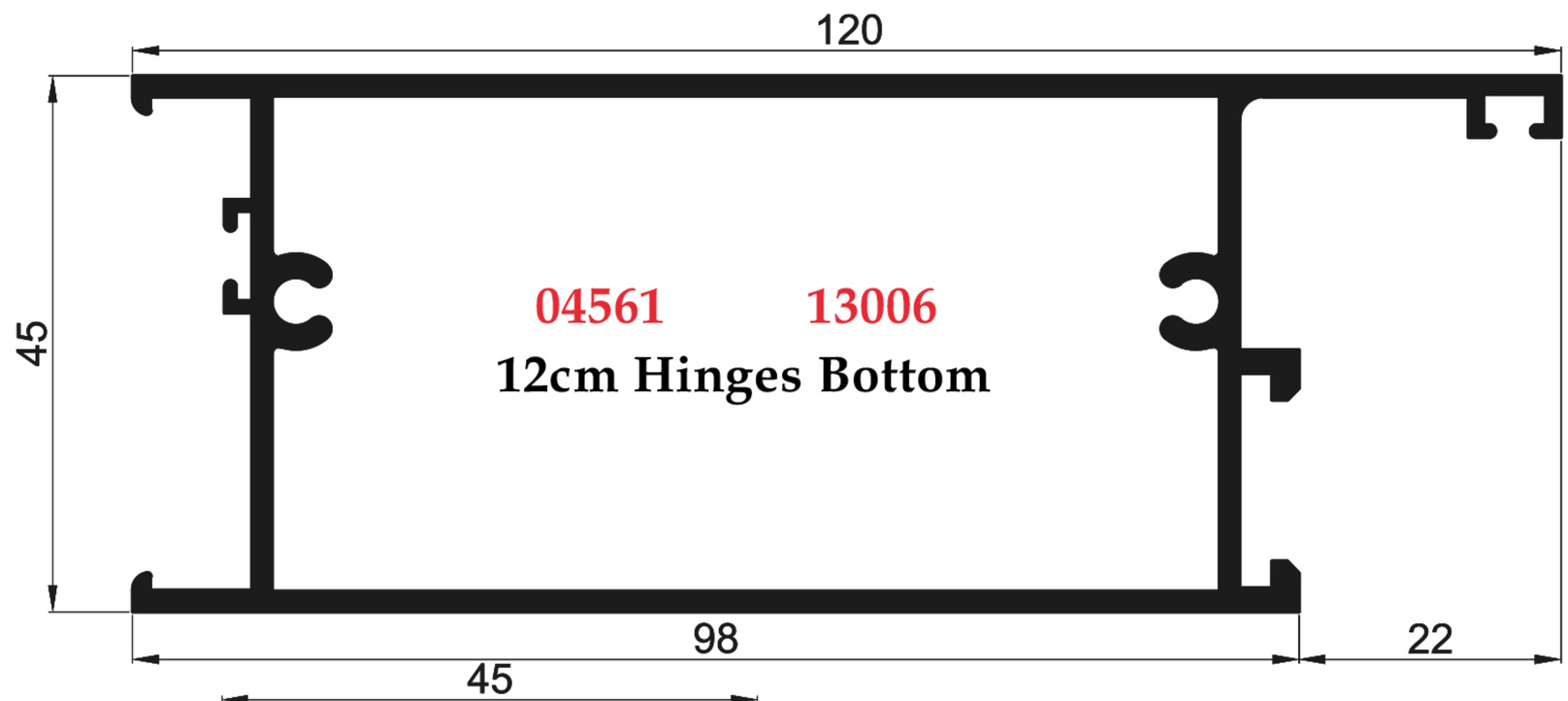
120
45
04561 13006
12cm Hinges Bottom
98
22

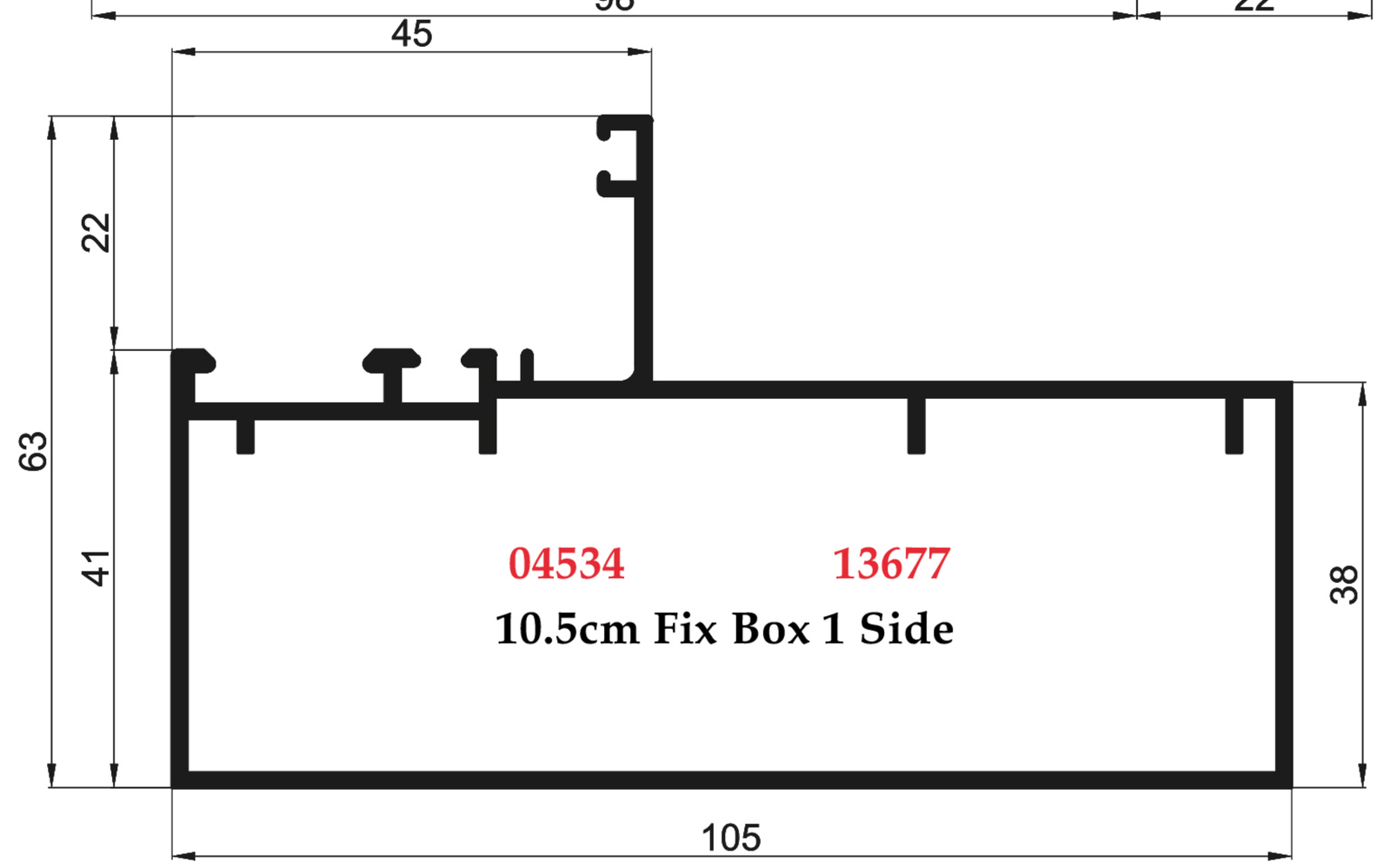
45
22
63
41
04534 13677
10.5cm Fix Box 1 Side
38
105

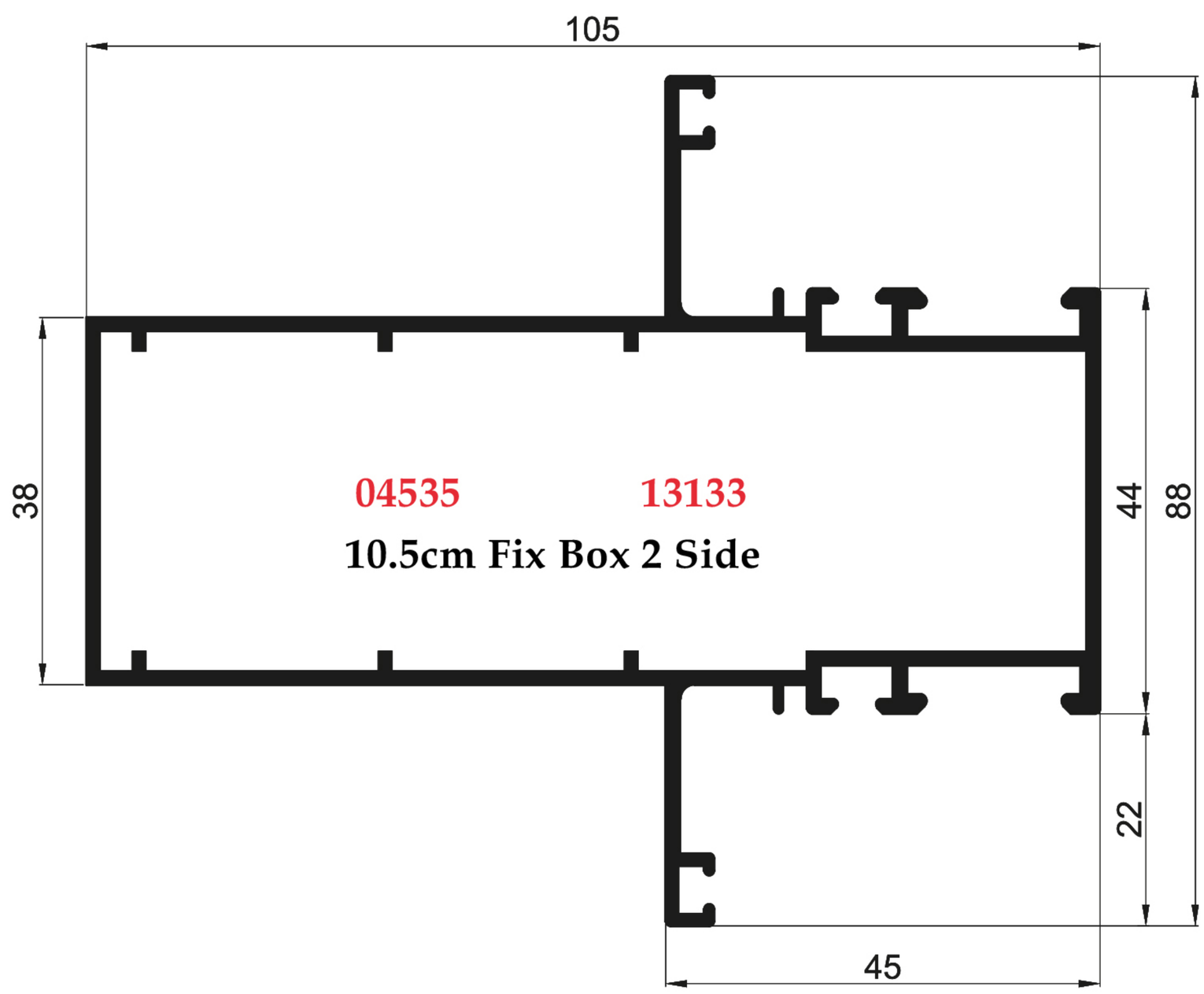
105
38
04535 13133
10.5cm Fix Box 2 Side
44
88
22
45

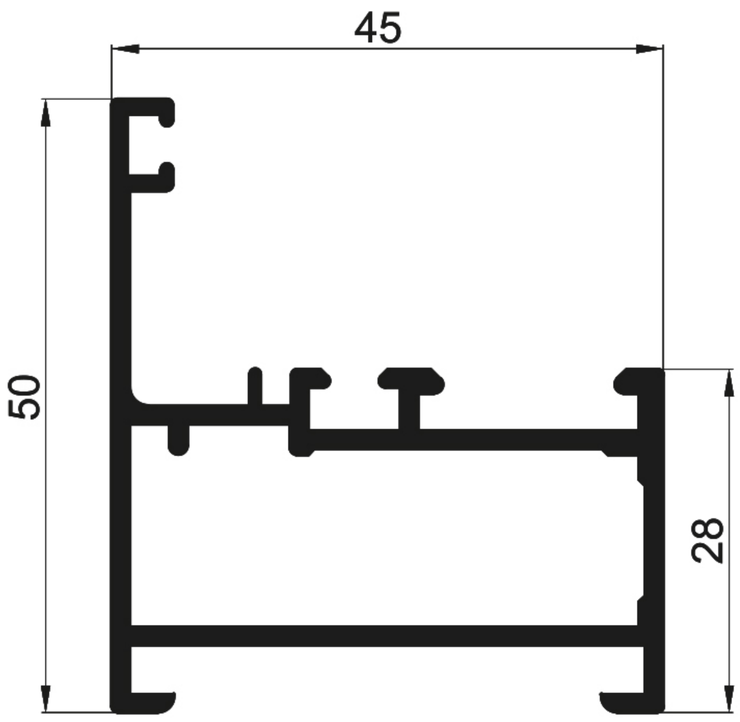

04513 12983

45mm Fix Without Overlap

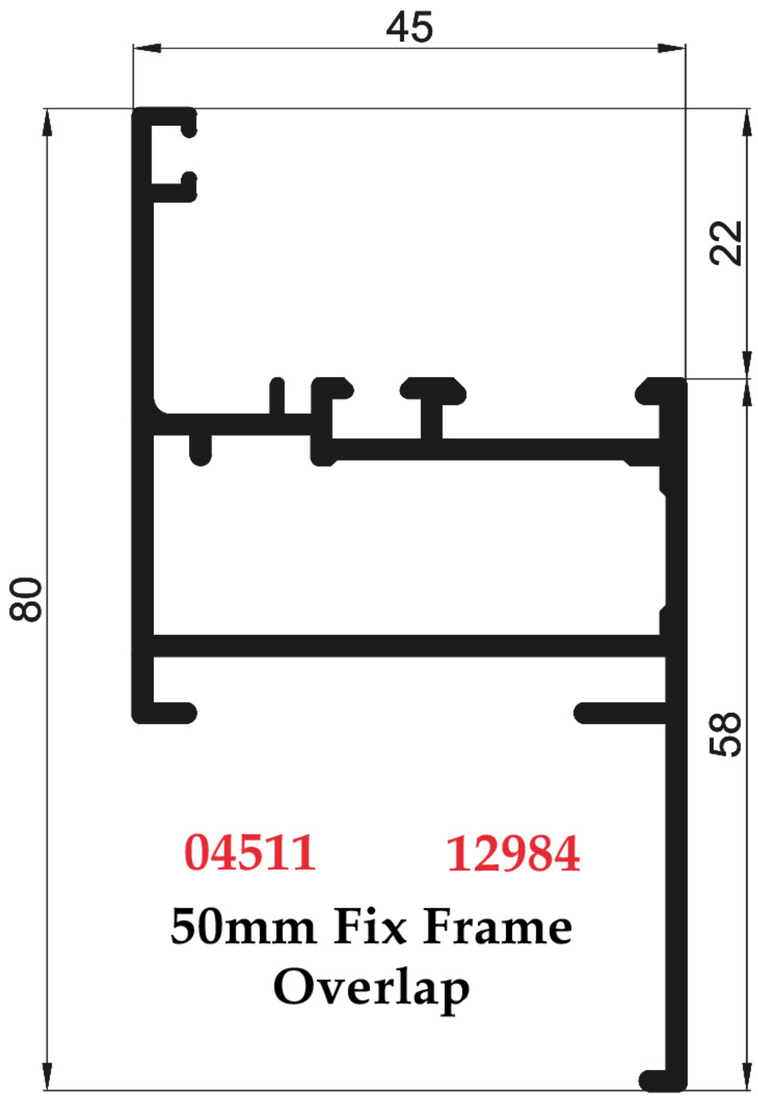

04511 12984

50mm Fix Frame Overlap

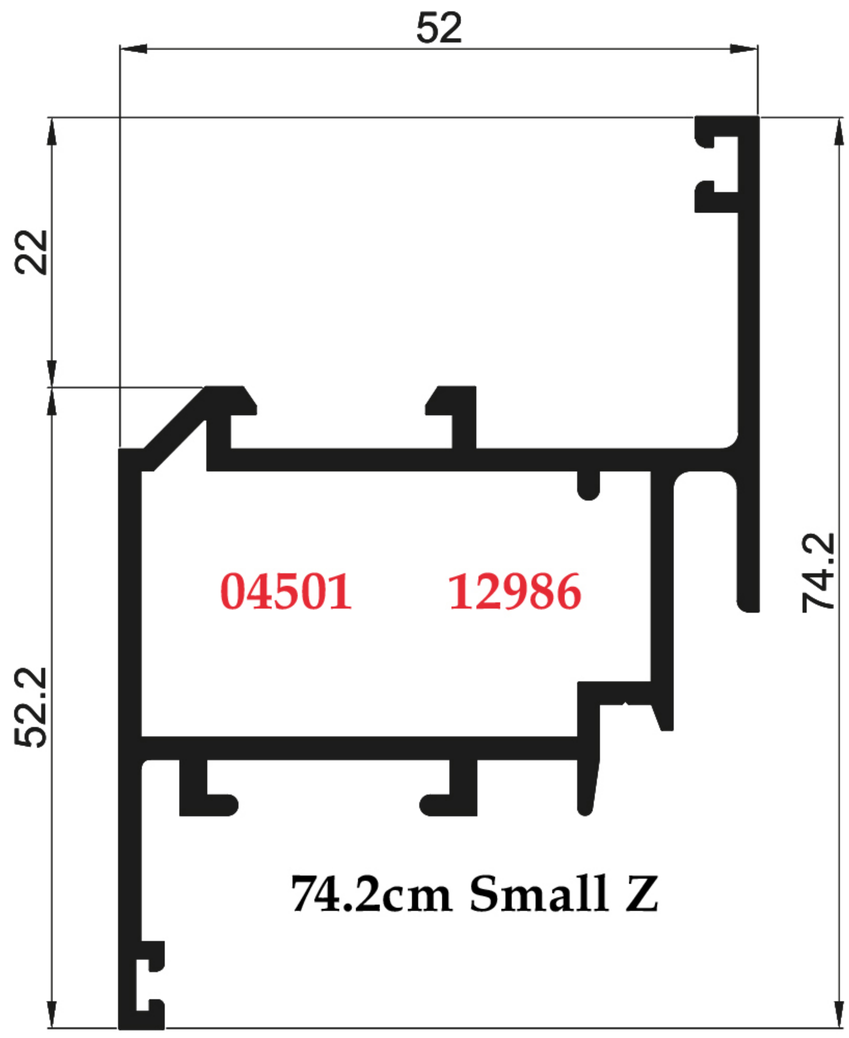

04501 12986

74.2cm Small Z

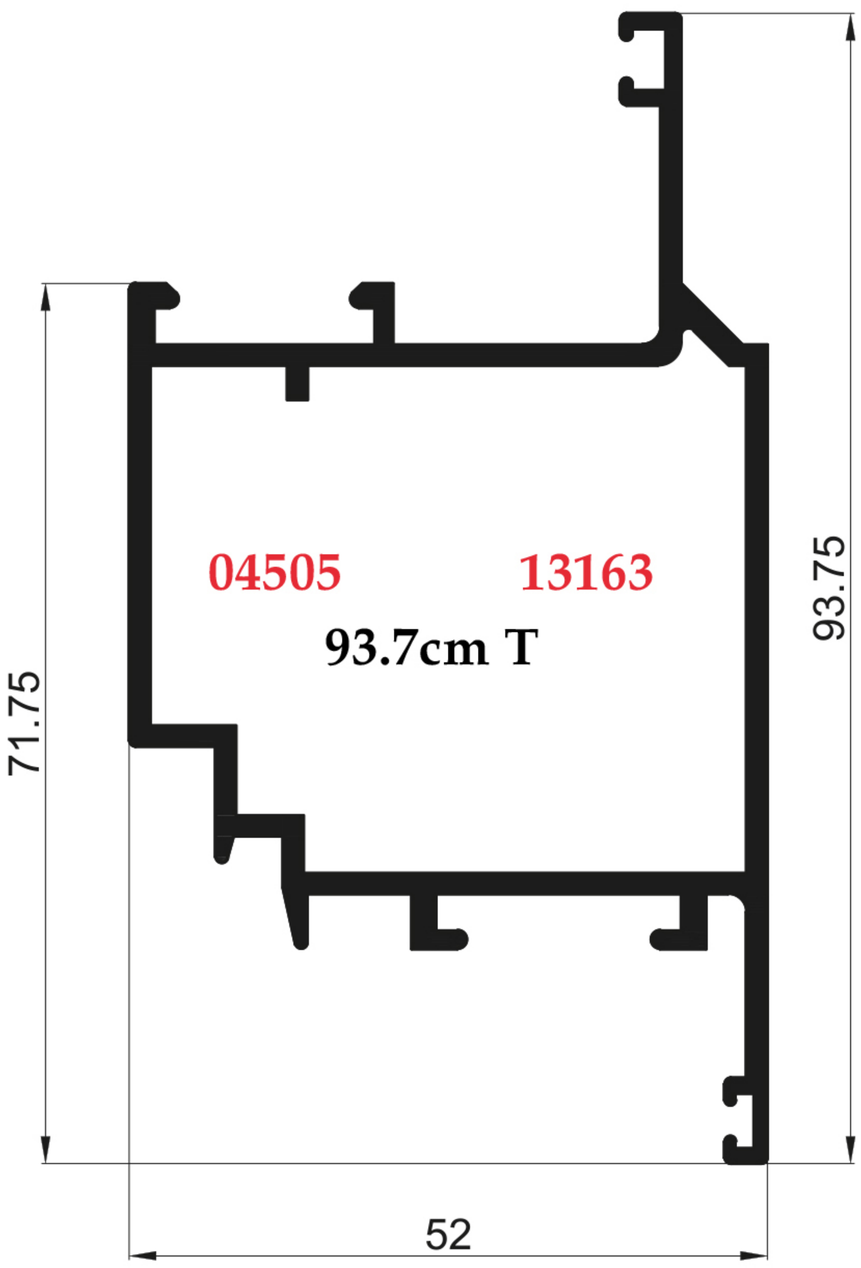

04505 13163

93.7cm T

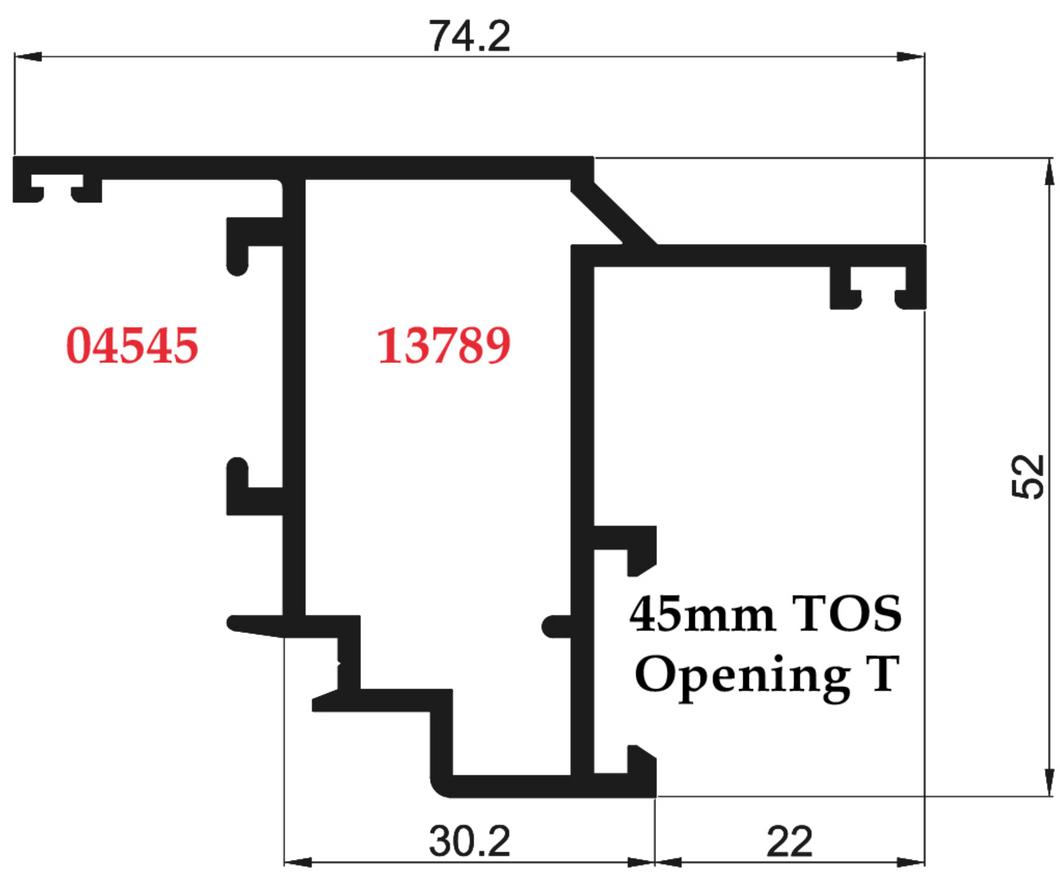

04545 13789

45mm TOS Opening T

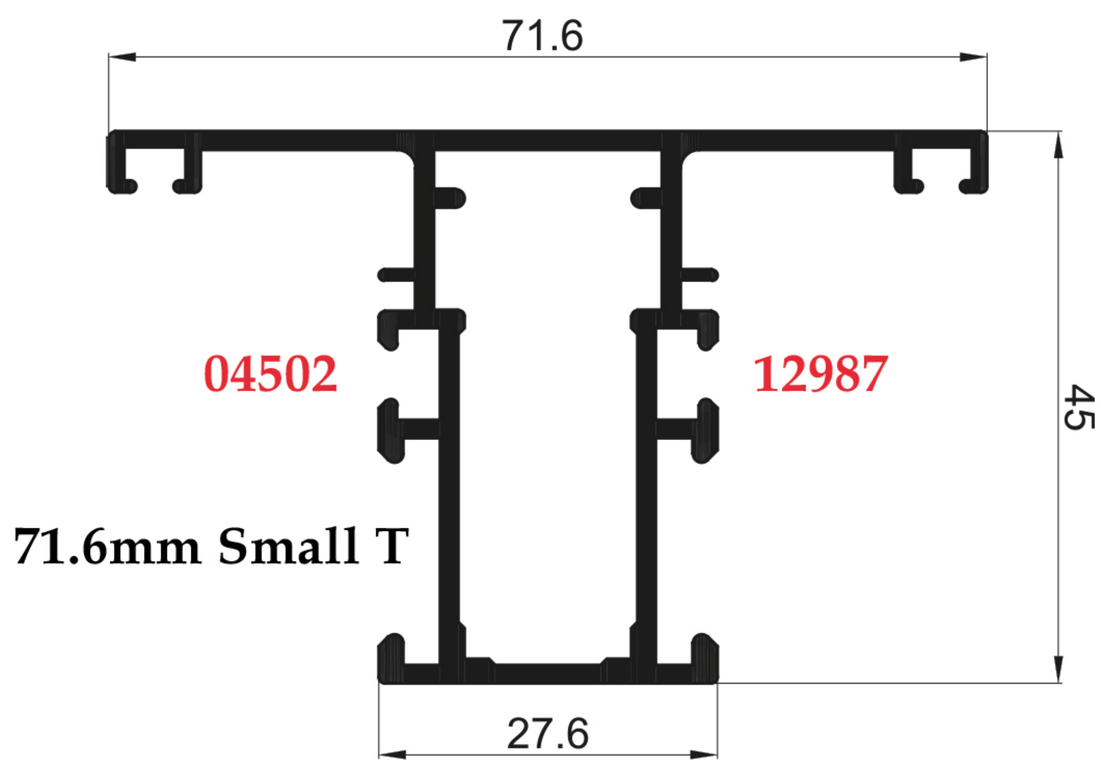

04502 12987

71.6mm Small T

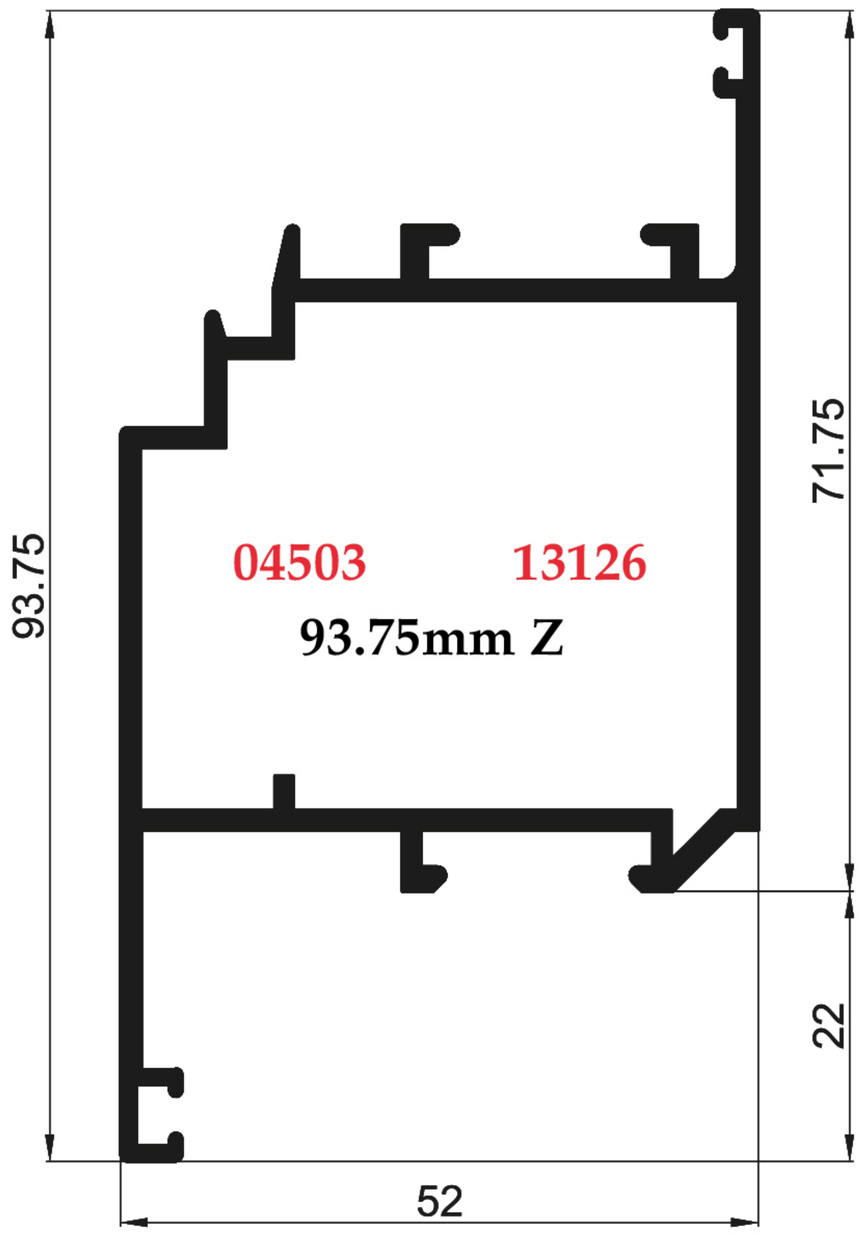
93.75
71.75
22
52
04503
13126
93.75mm Z

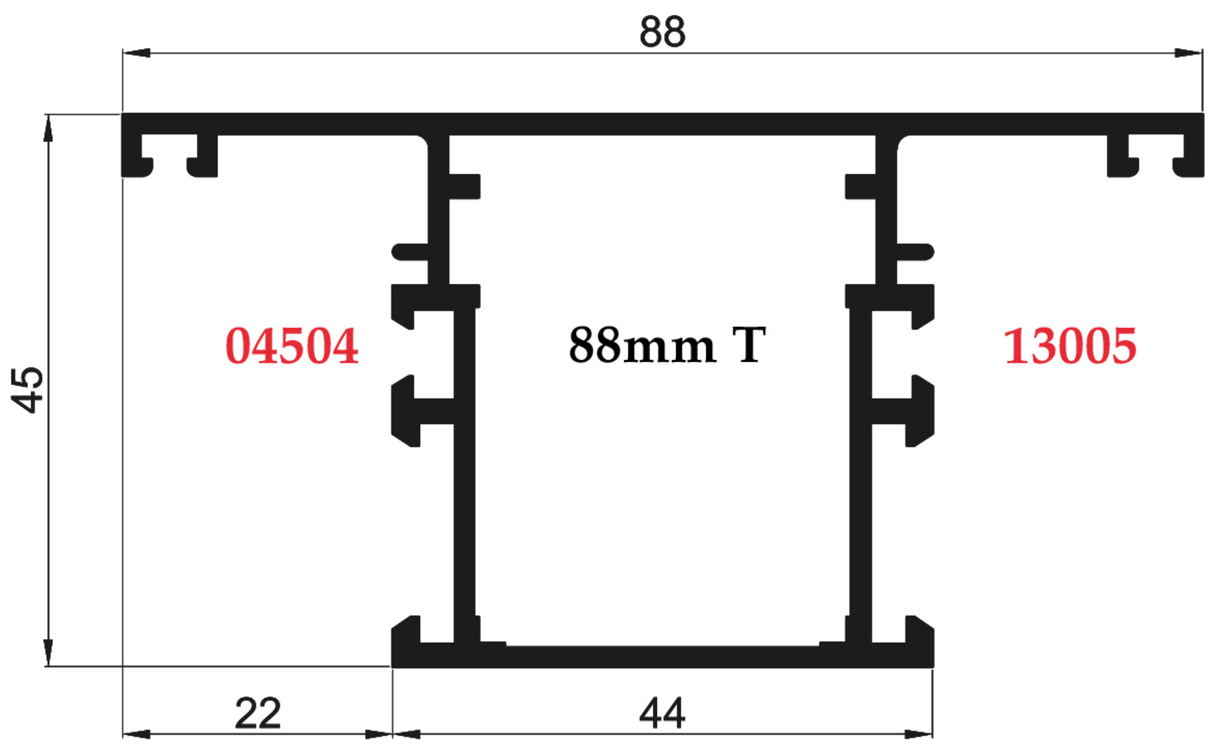
88
45
22
44
04504
88mm T
13005

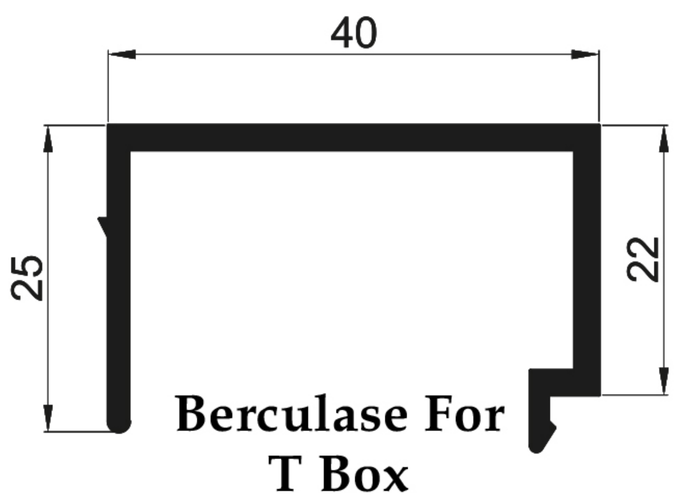
40
25
22
Berculase For
T Box
04525
10765

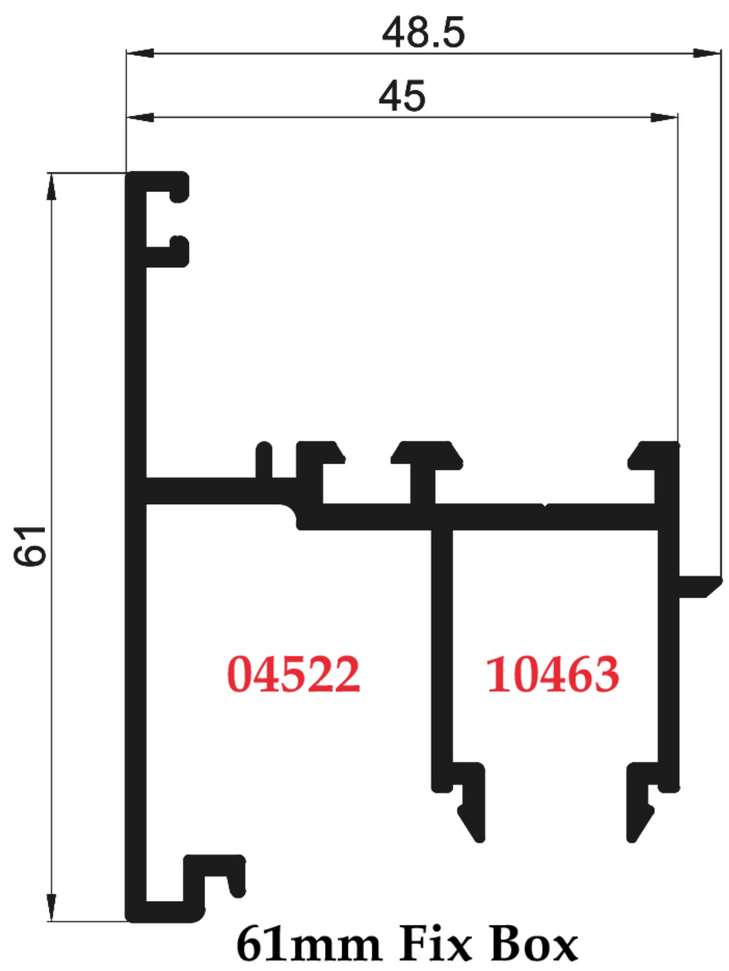
48.5
45
61
04522
10463
61mm Fix Box

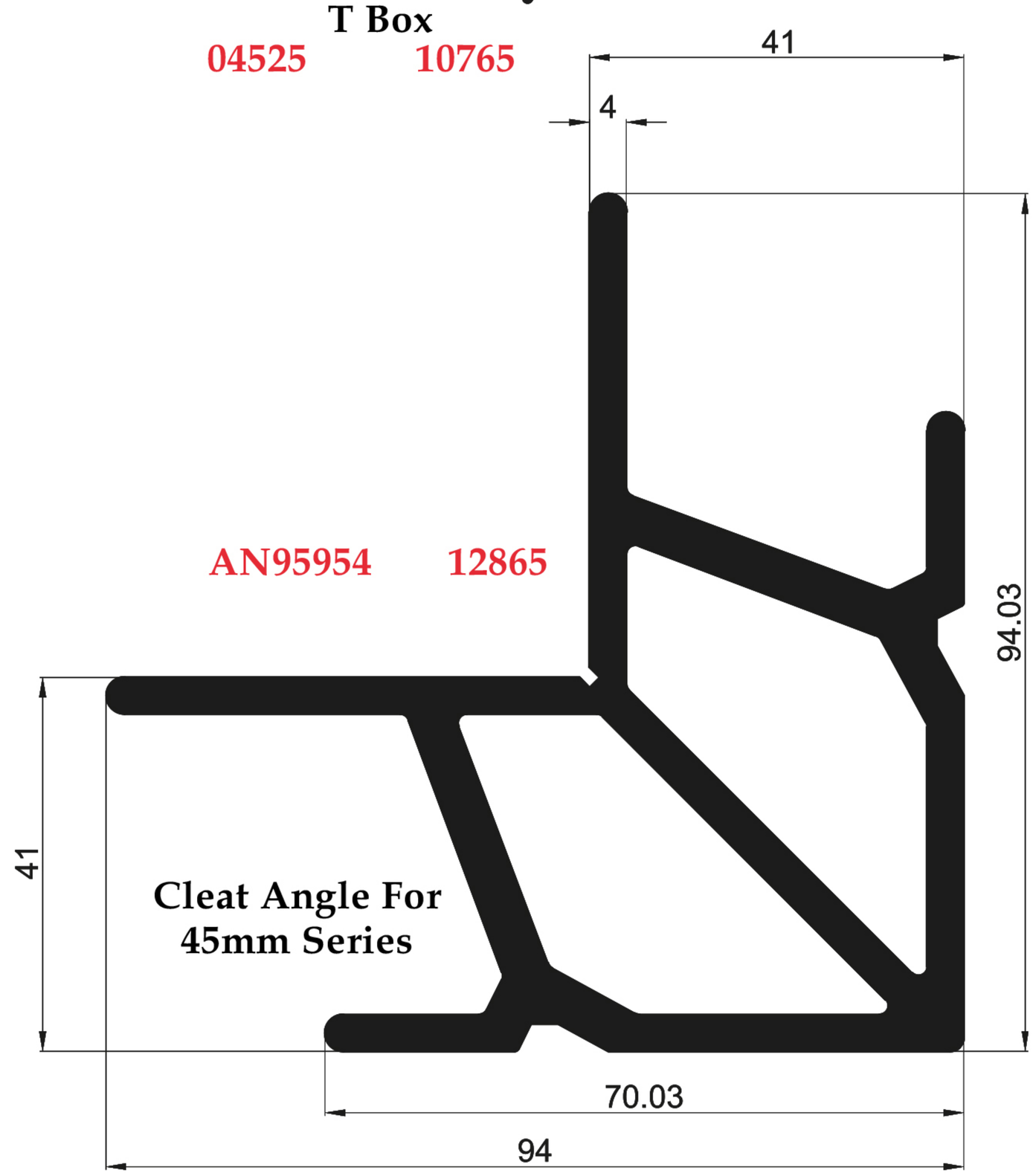
41
4
94.03
41
AN95954
12865
Cleat Angle For
45mm Series
70.03
94

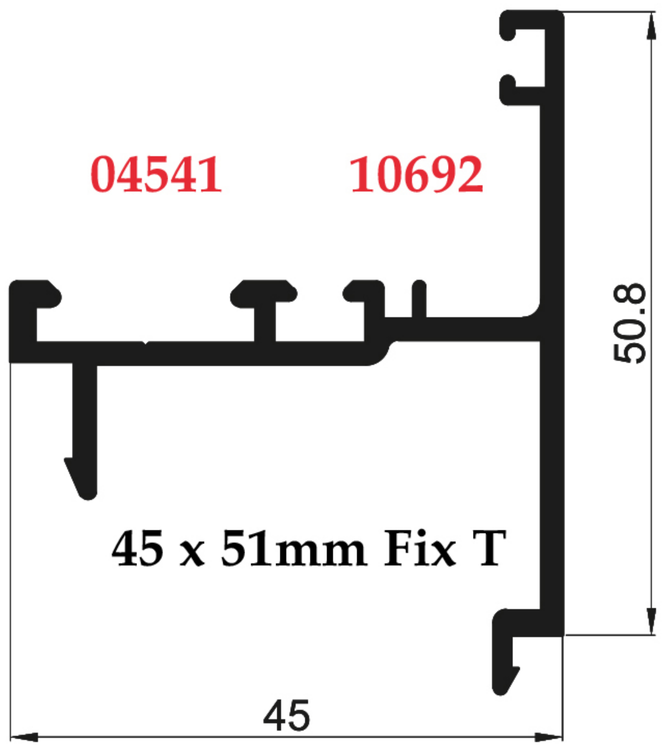

04541 10692

45 x 51mm Fix T

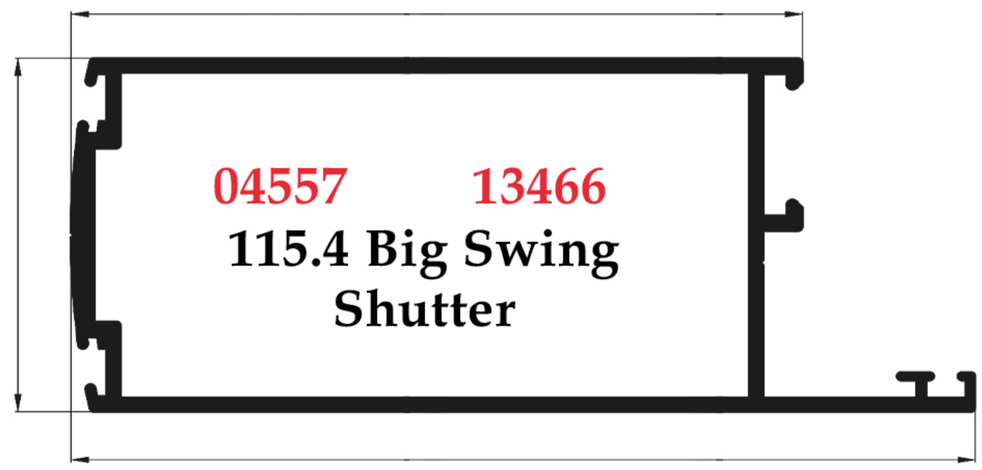

04557 13466

115.4 Big Swing Shutter

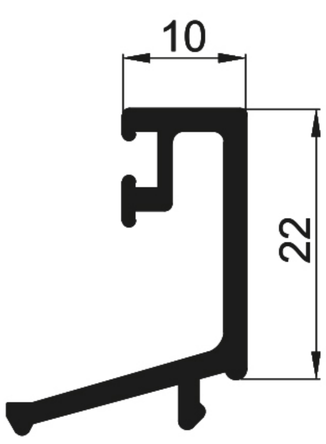

04521 10464

Berculase Double Glass

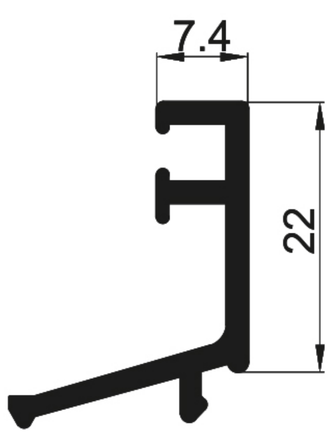

04526 11321

Berculase Double Glass 7.5mm

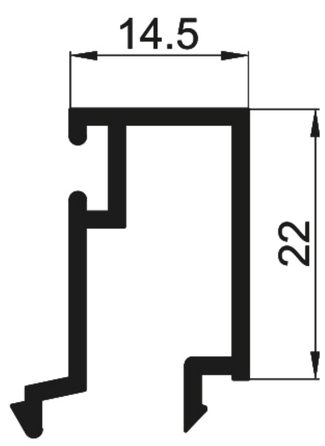

04524 10377

Special Berculase For DBL Glass

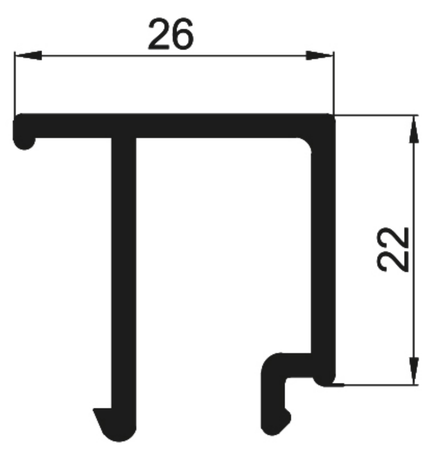

04523 10371

Berculase Single Glass

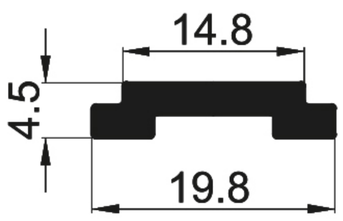

04574 09888

10.5cm Small Sliding Clip

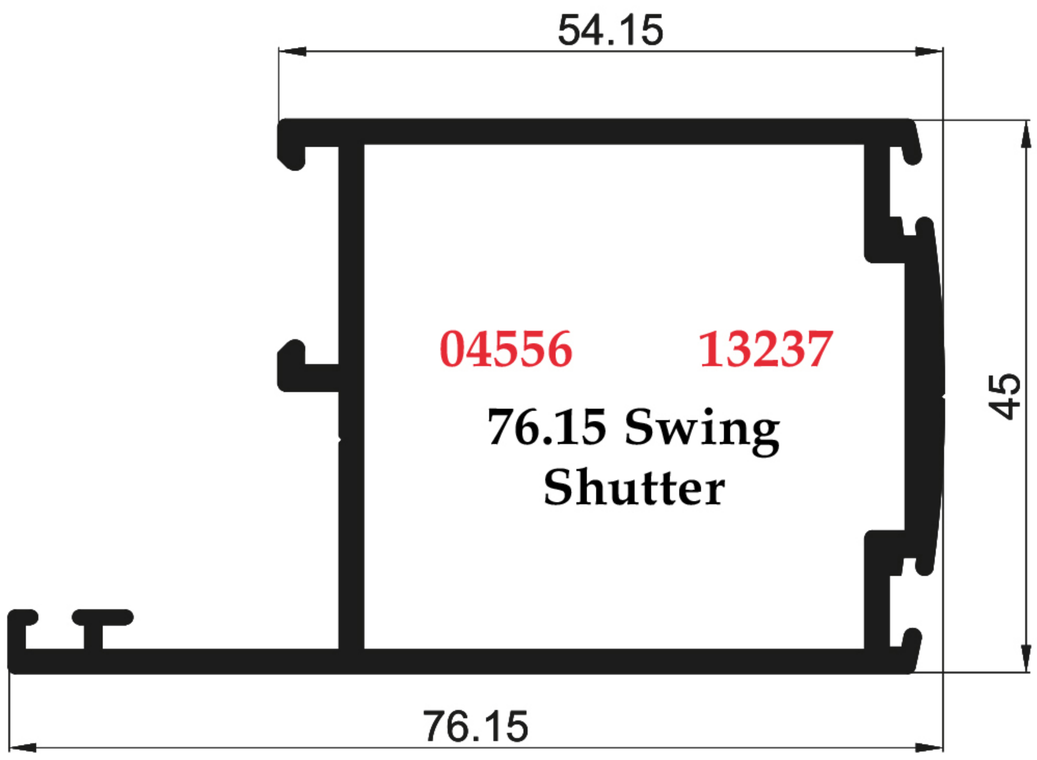

04556 13237

76.15 Swing Shutter

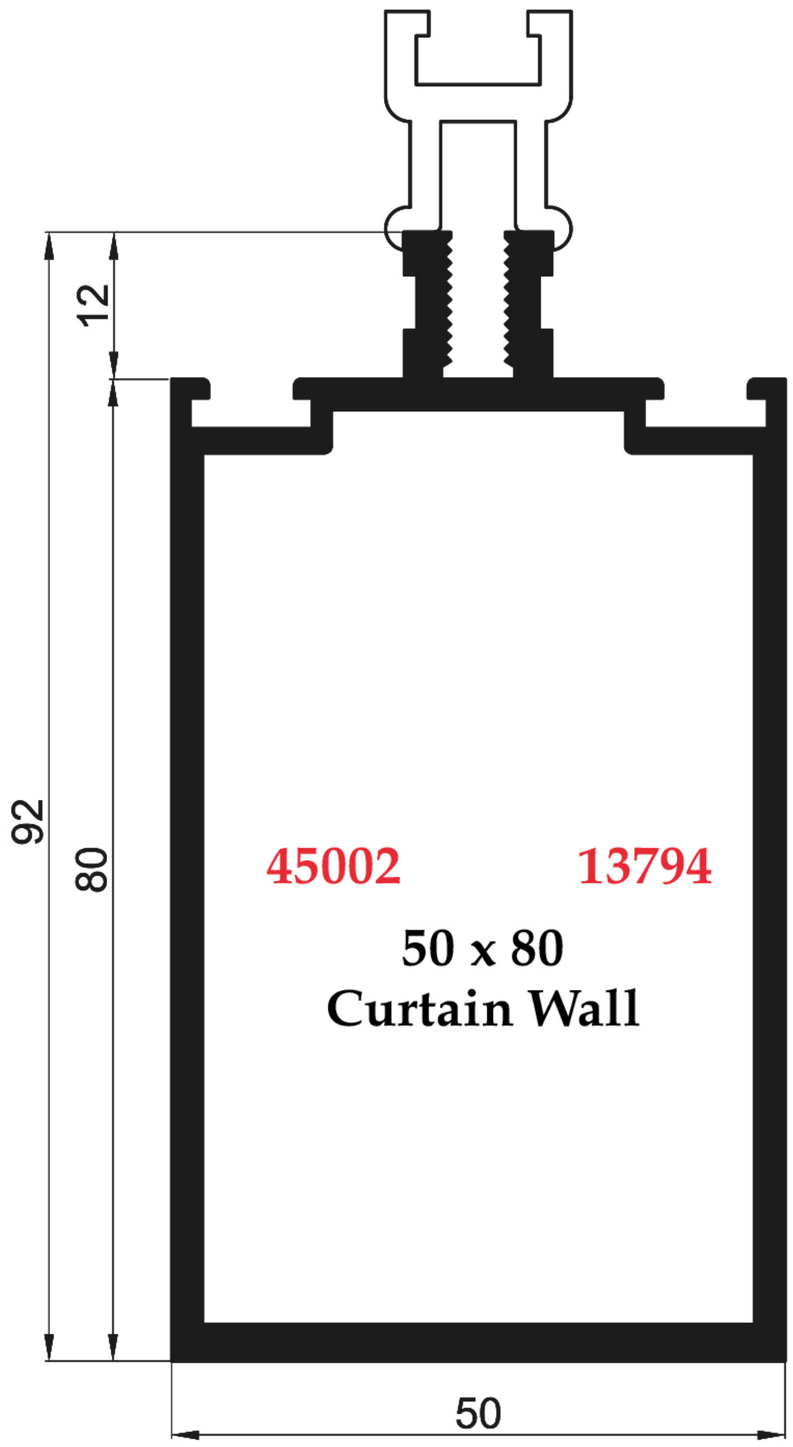

45002 13794

50 x 80
Curtain Wall

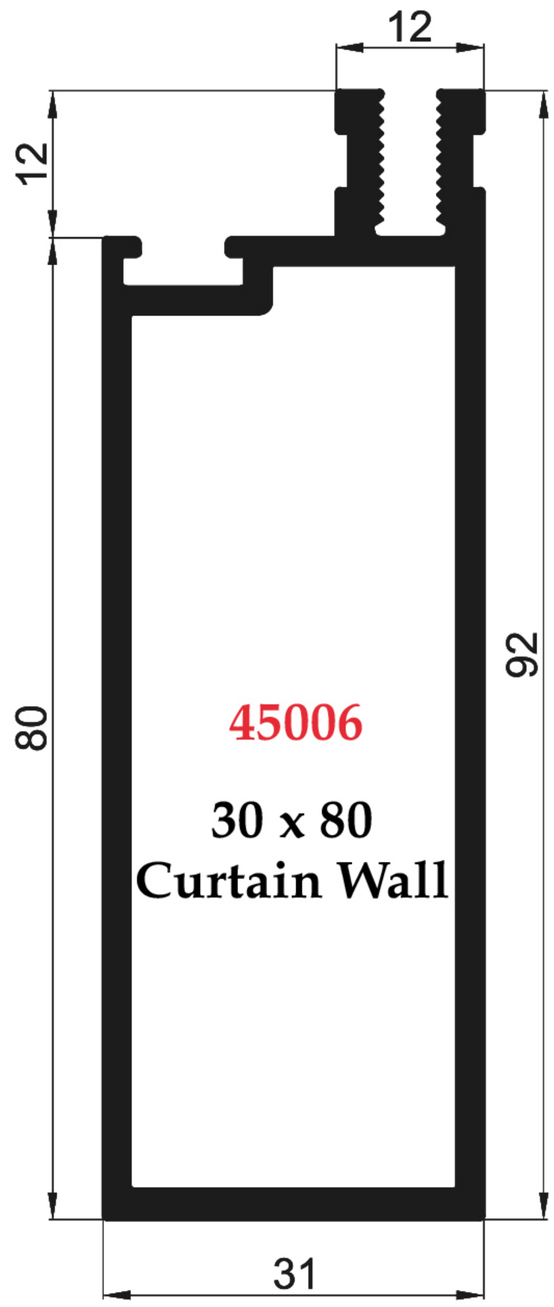

45006

30 x 80
Curtain Wall

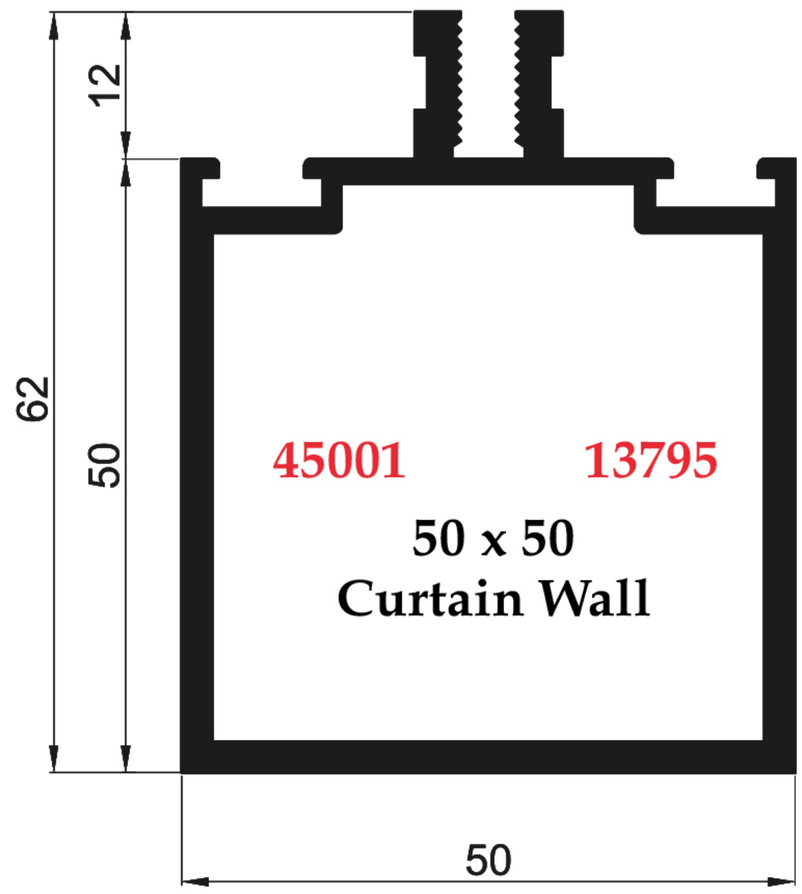

45001 13795

50 x 50
Curtain Wall

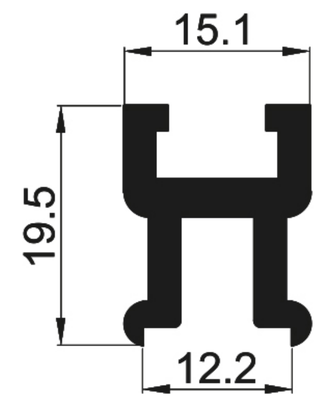

45015 11472

Curtain Wall
Fix Clip

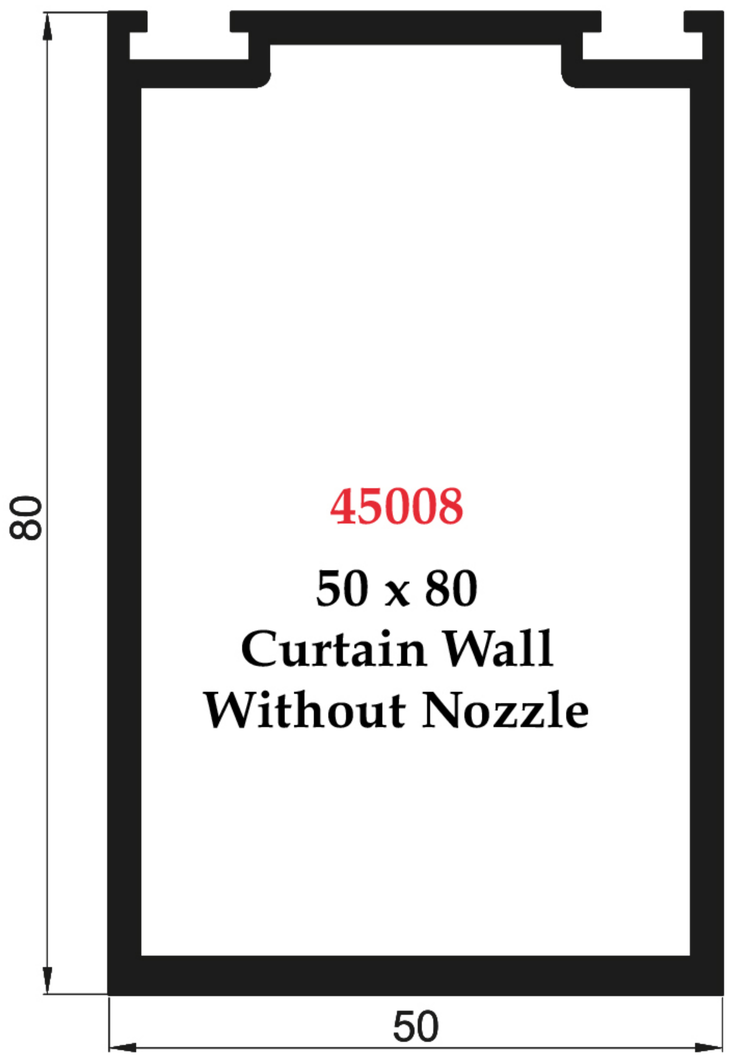

45008

50 x 80
Curtain Wall
Without Nozzle

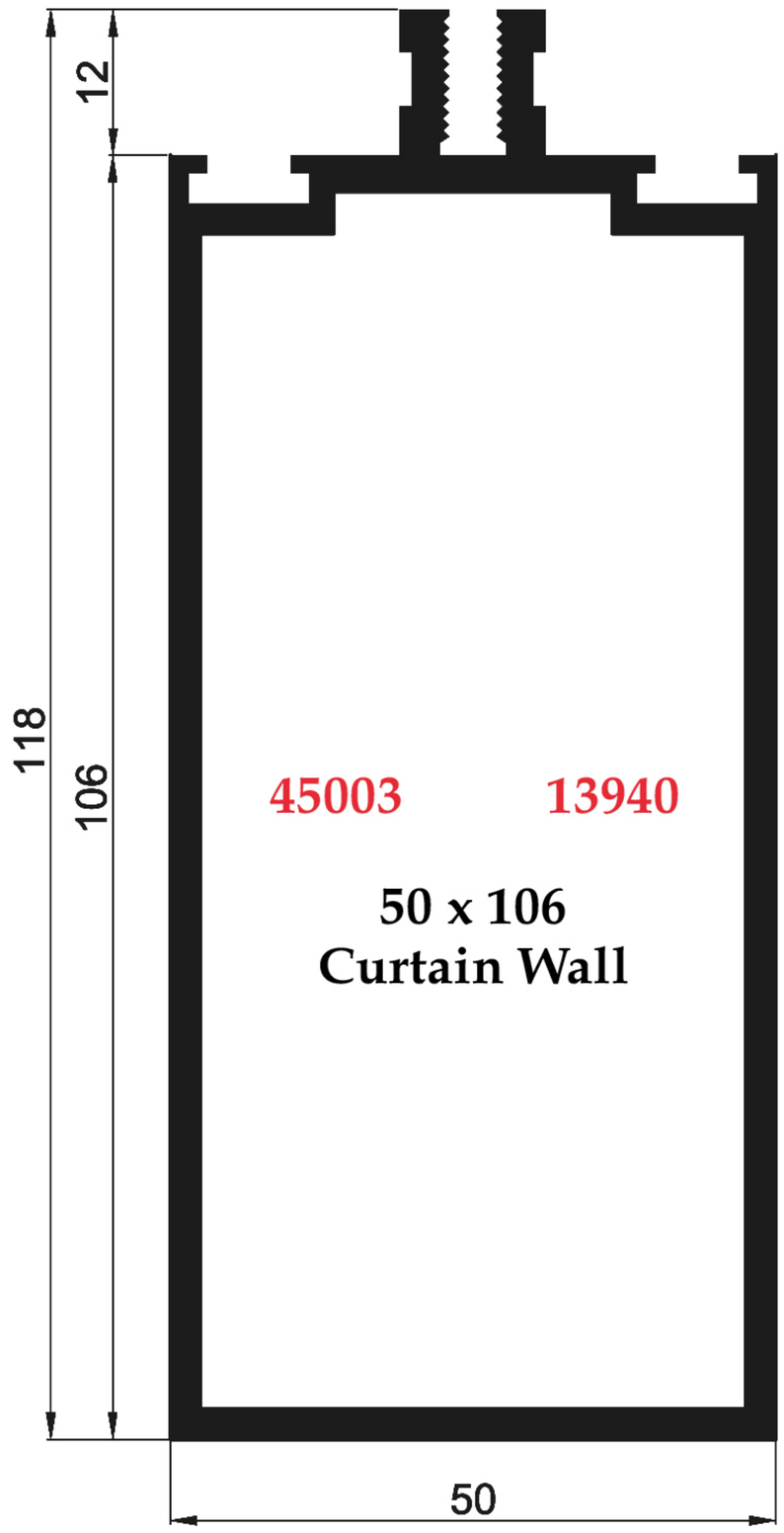

45003 13940

50 x 106
Curtain Wall

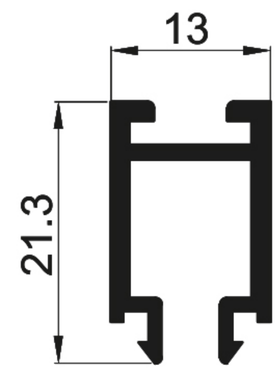

45016 10529

Curtain Wall
Side Fix Clip

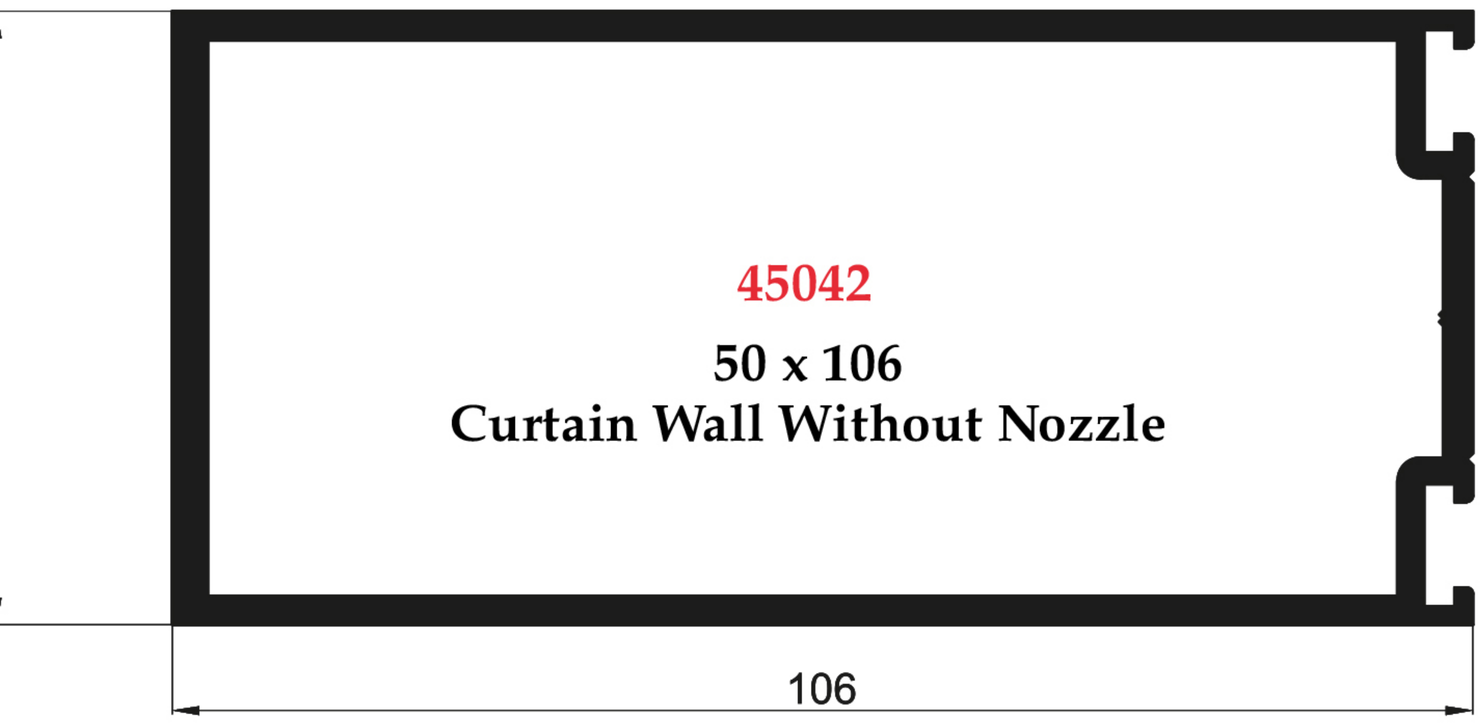

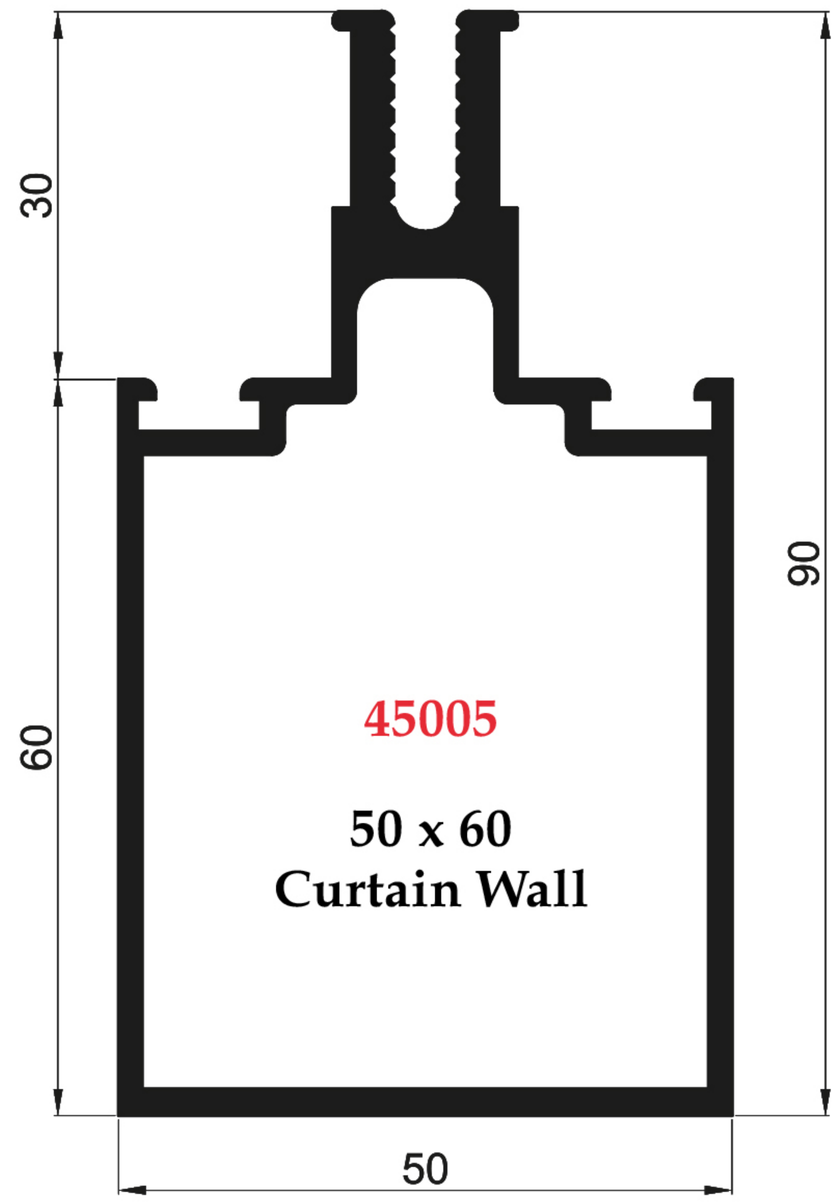

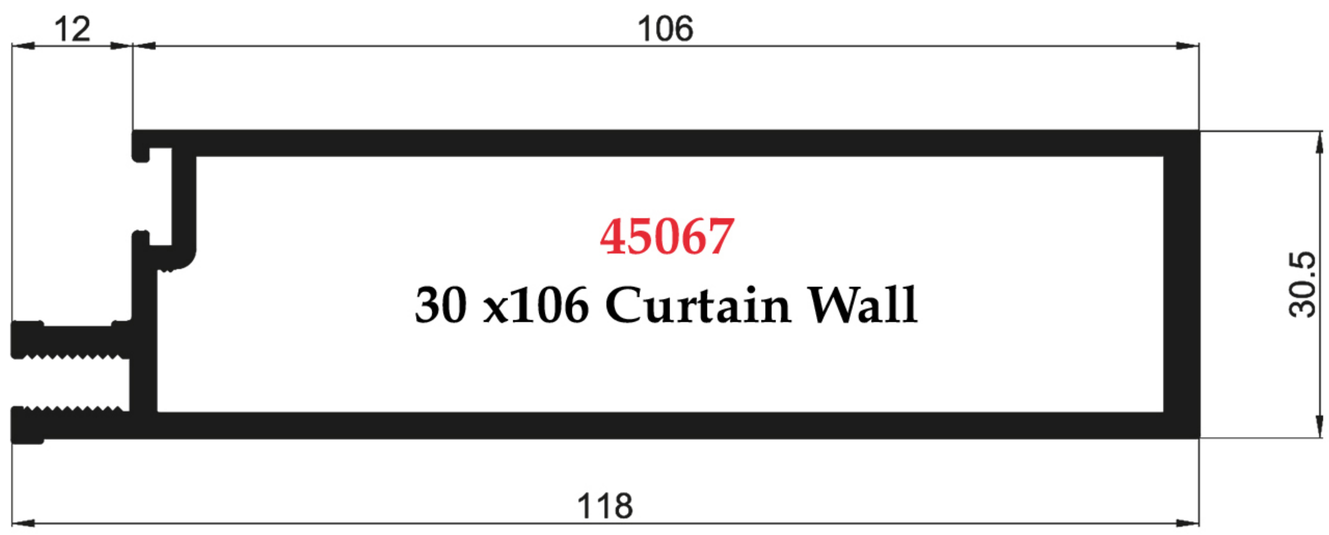

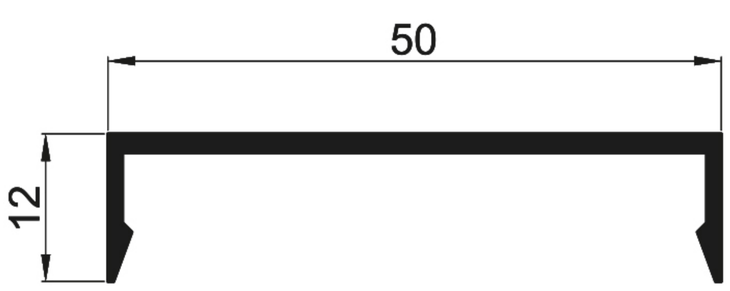

45012 11069
12mm
Curtain Wall Cover

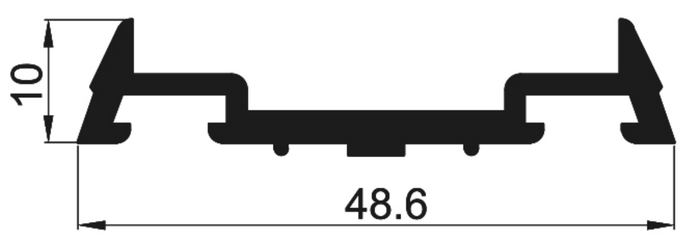

45011 11388
Pressure Plate

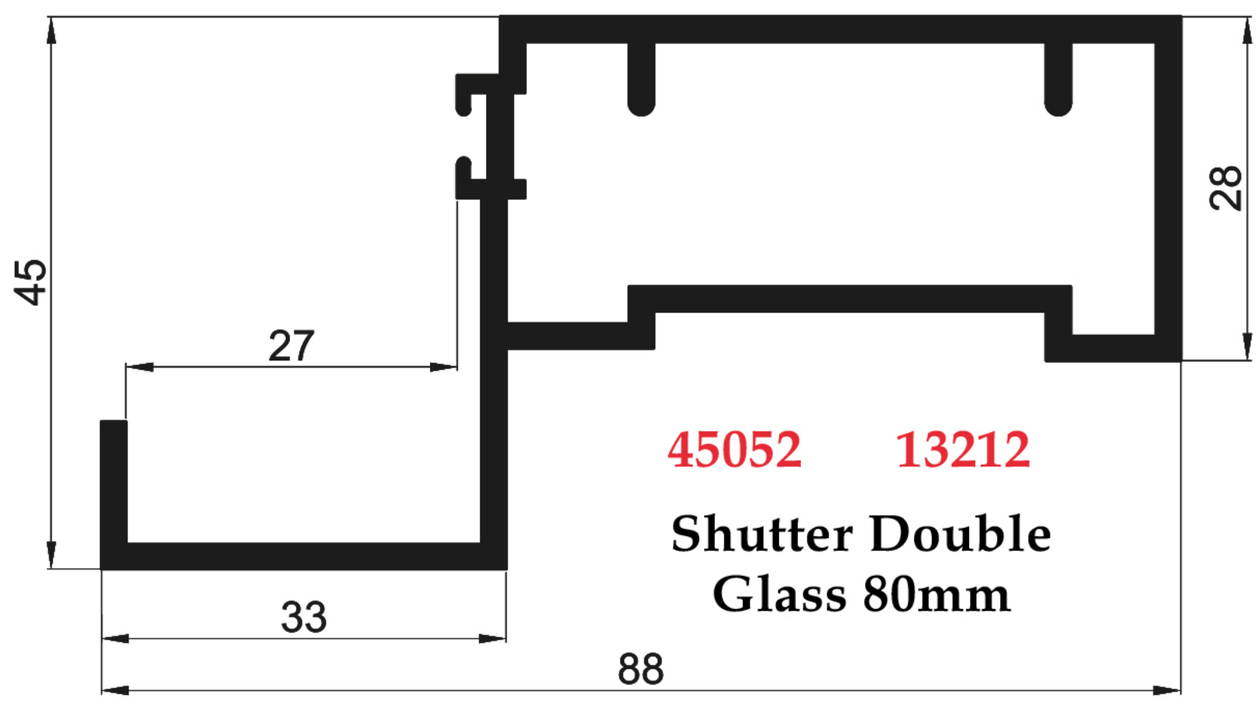

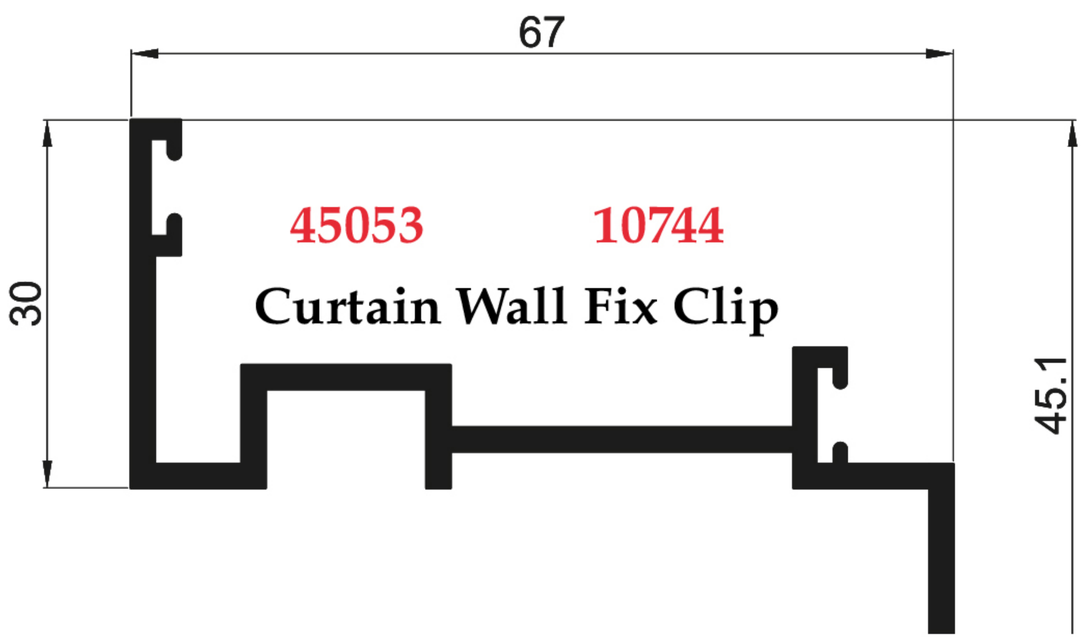

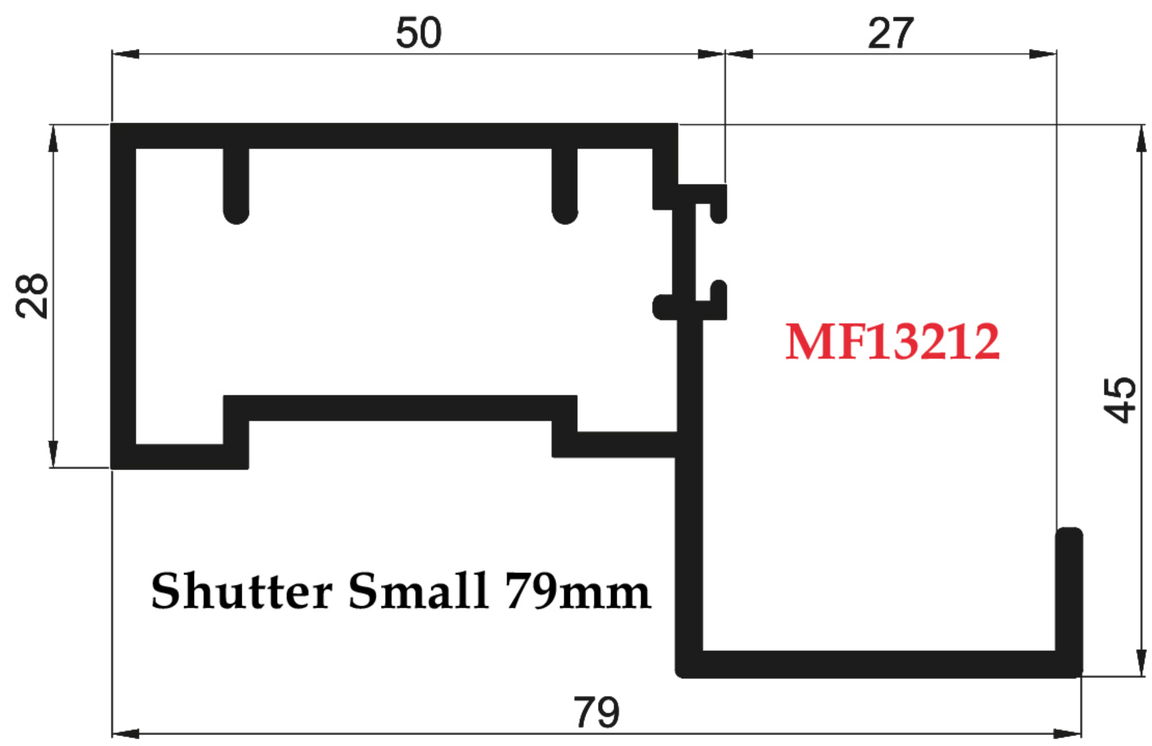

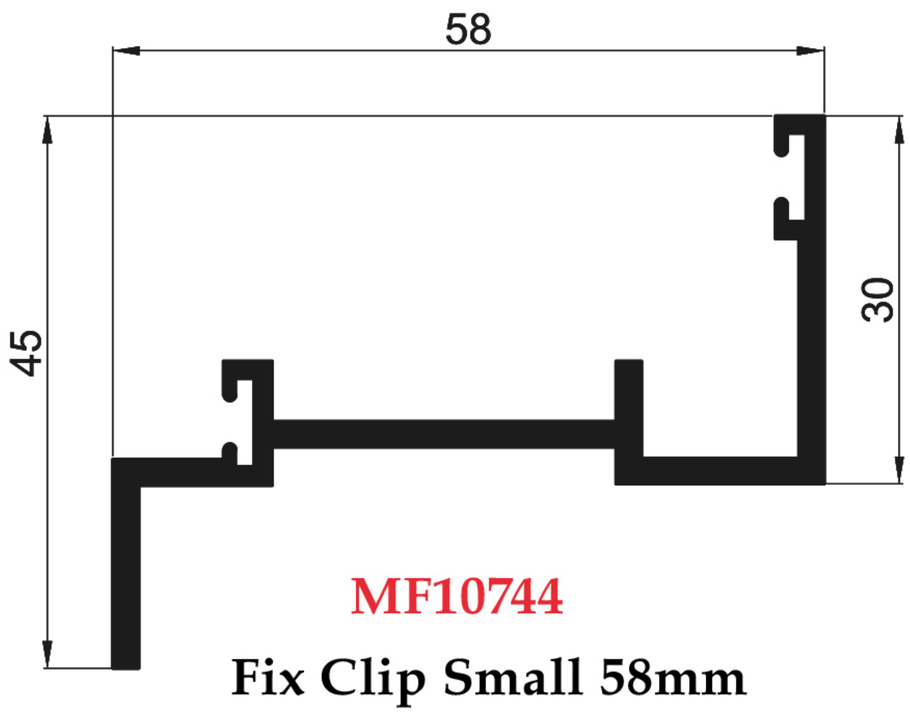

MF10744

Fix Clip Small 58mm

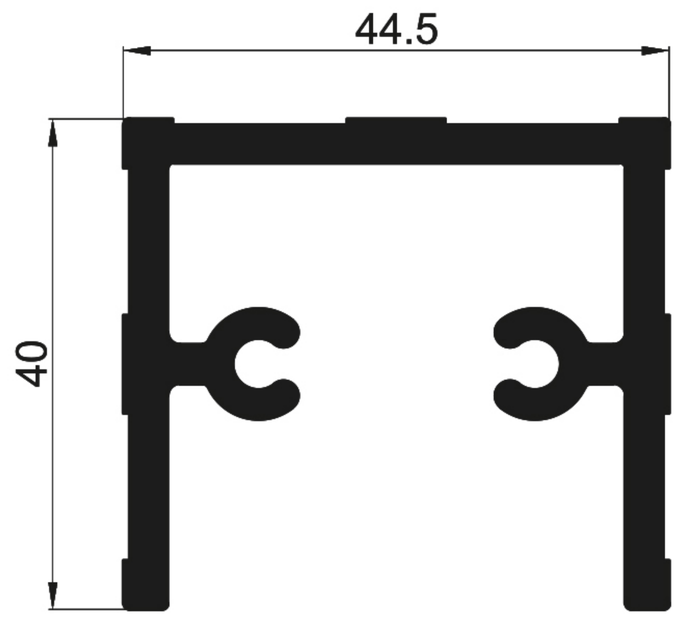

45025 **11359**

44.5mm Fix Angle

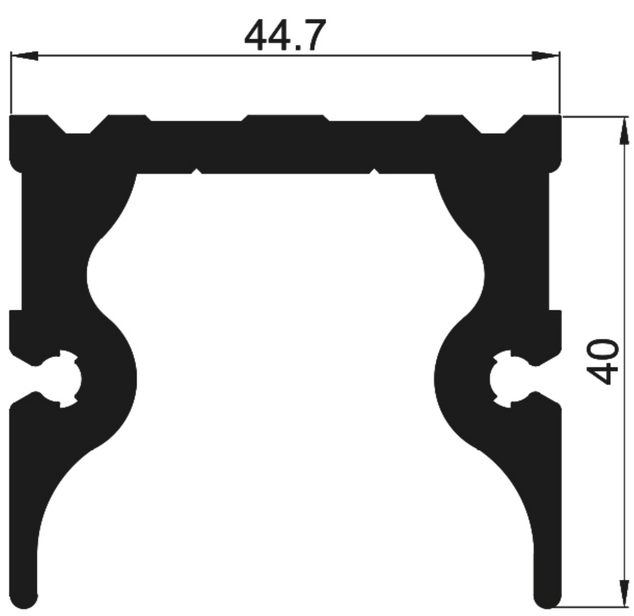

AL45025M6002S

44.7mm Fix Angle
Out Side Screw

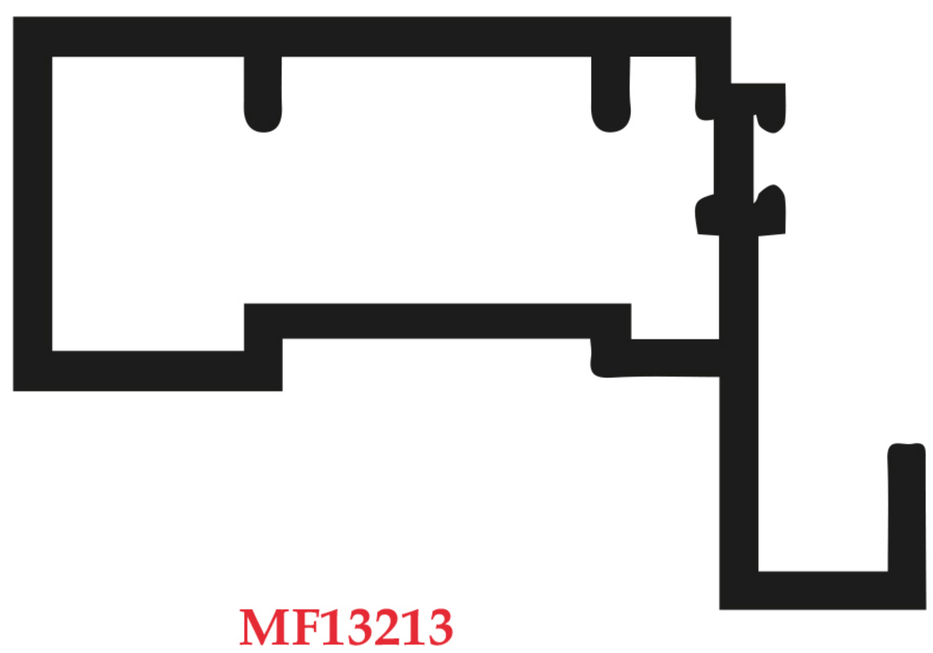

MF13213

44.7mm Fix Angle
Out Side Screw

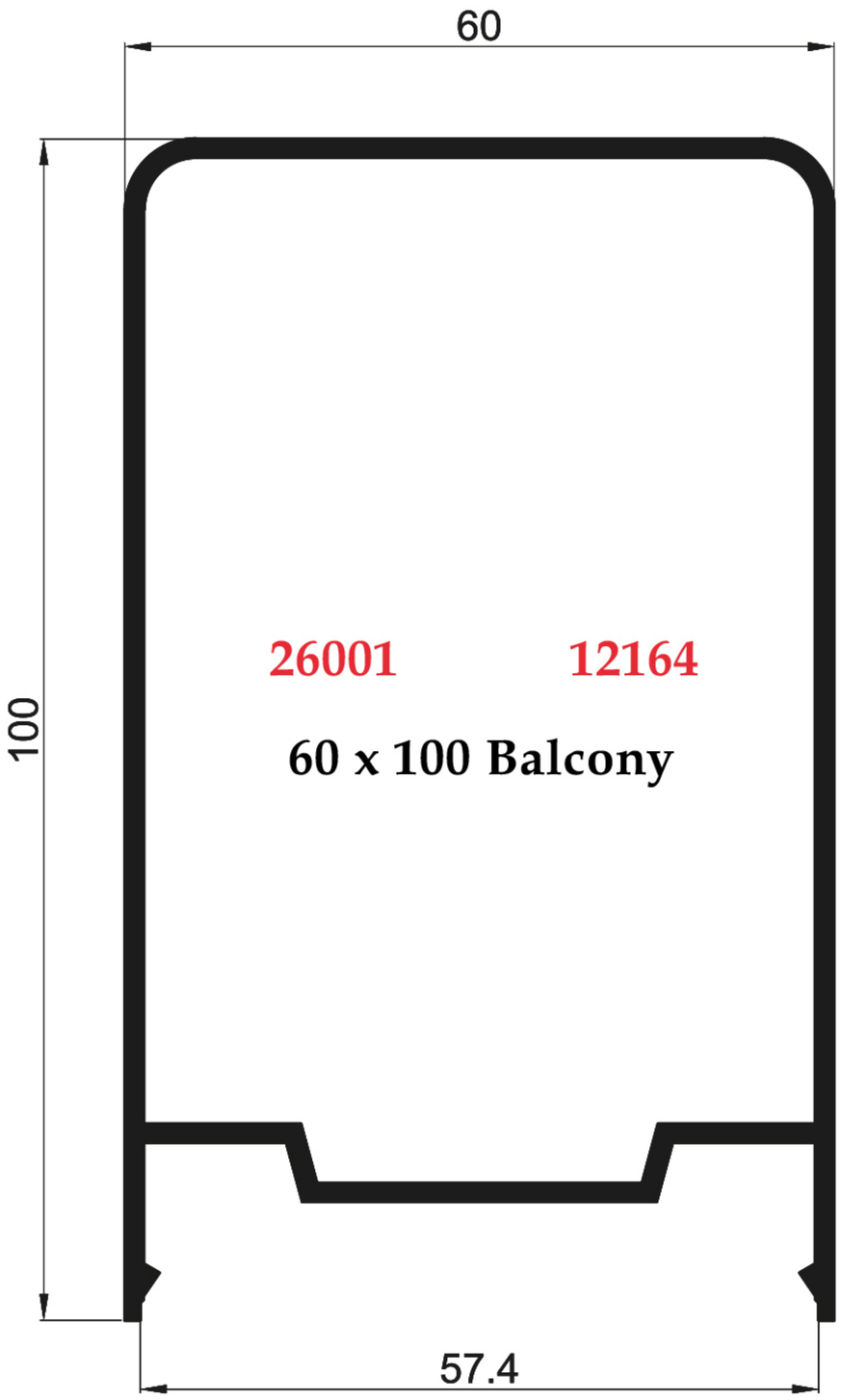

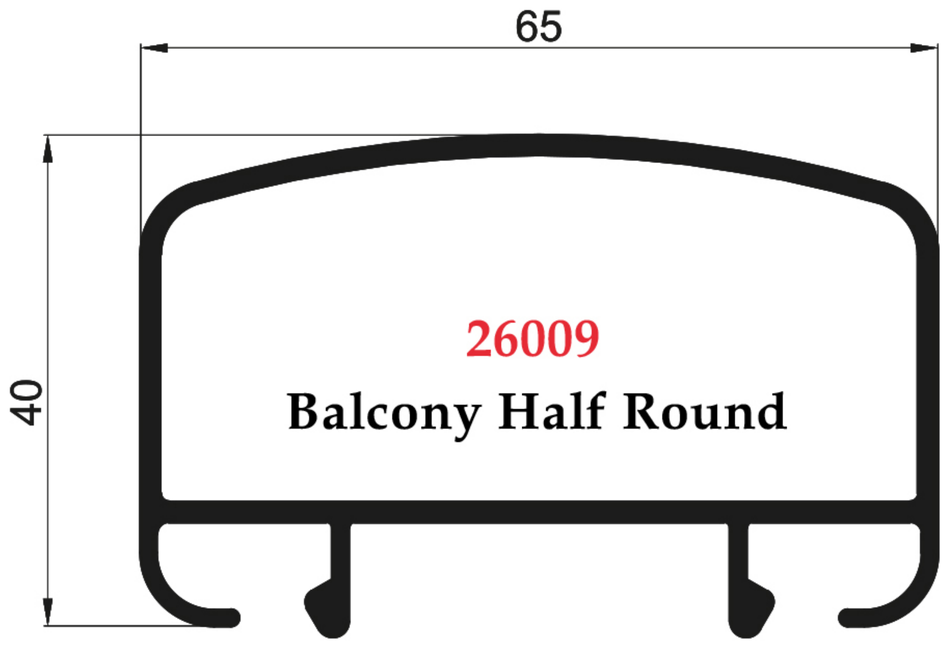

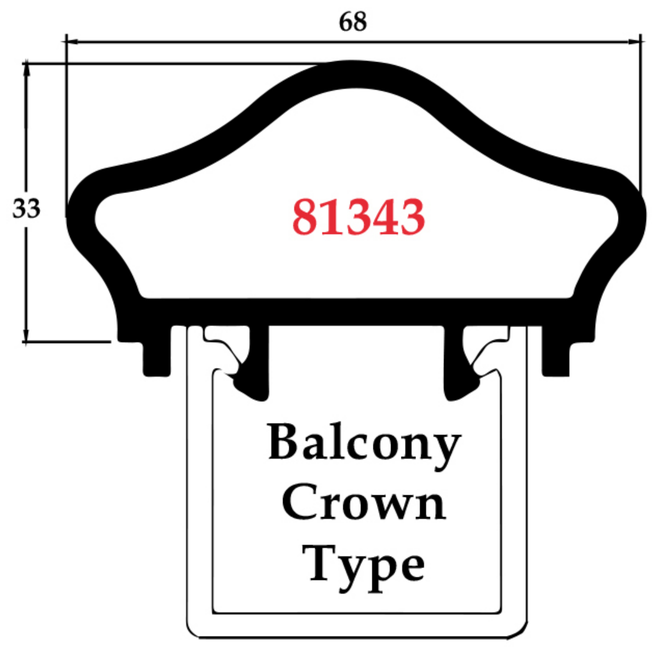

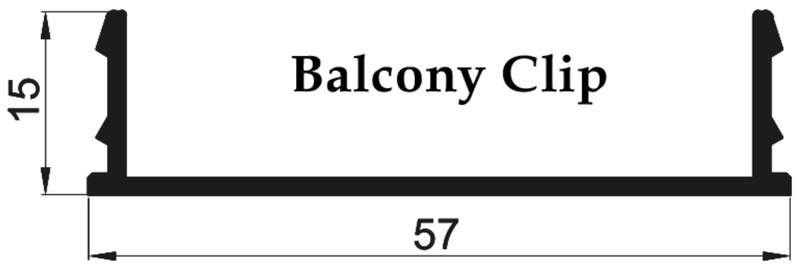

26002 09332

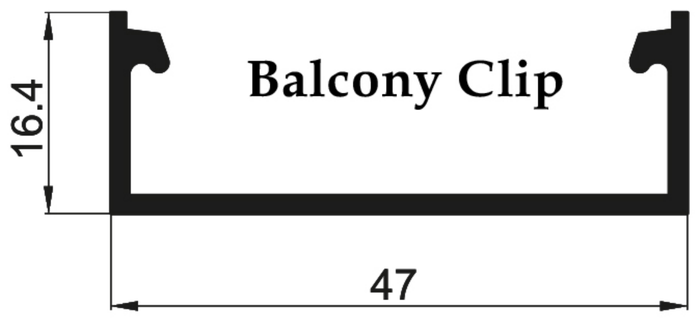

26010

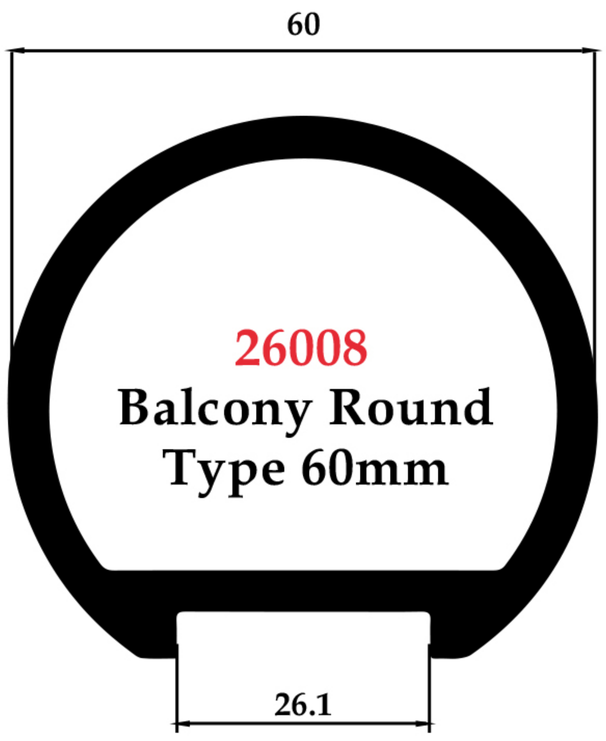

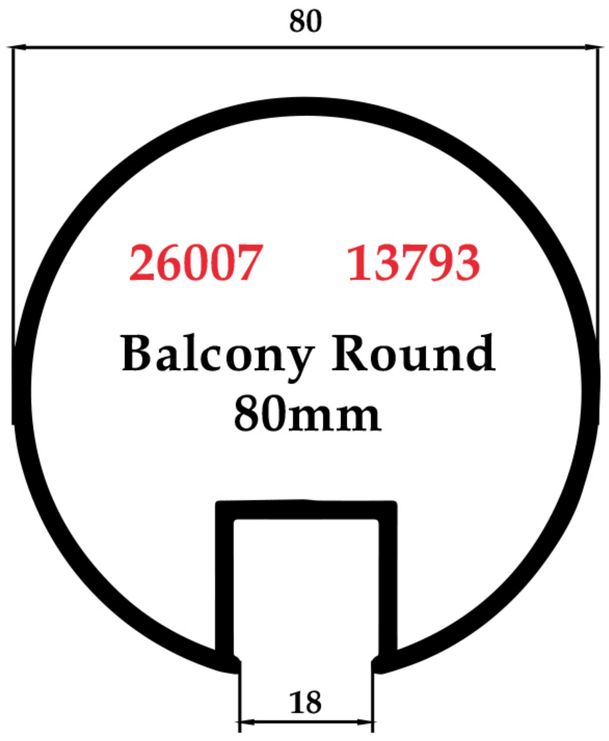

Badavi Pipe

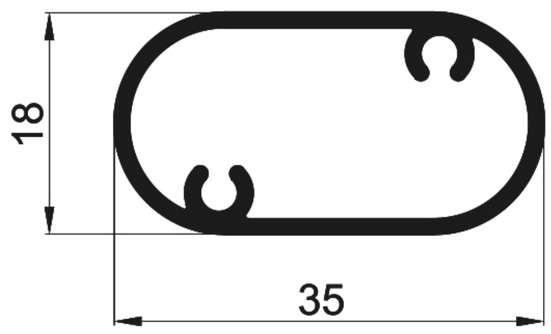

26031 12003L

AT20017AM600

200 X 17 Tube Plate Straight

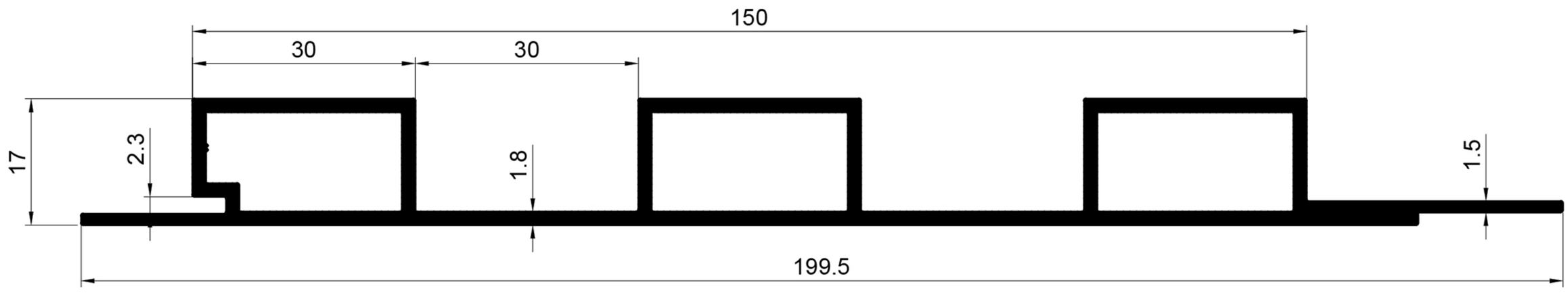

AT20017M600

200 X 17 Tube Plate 3 Cut

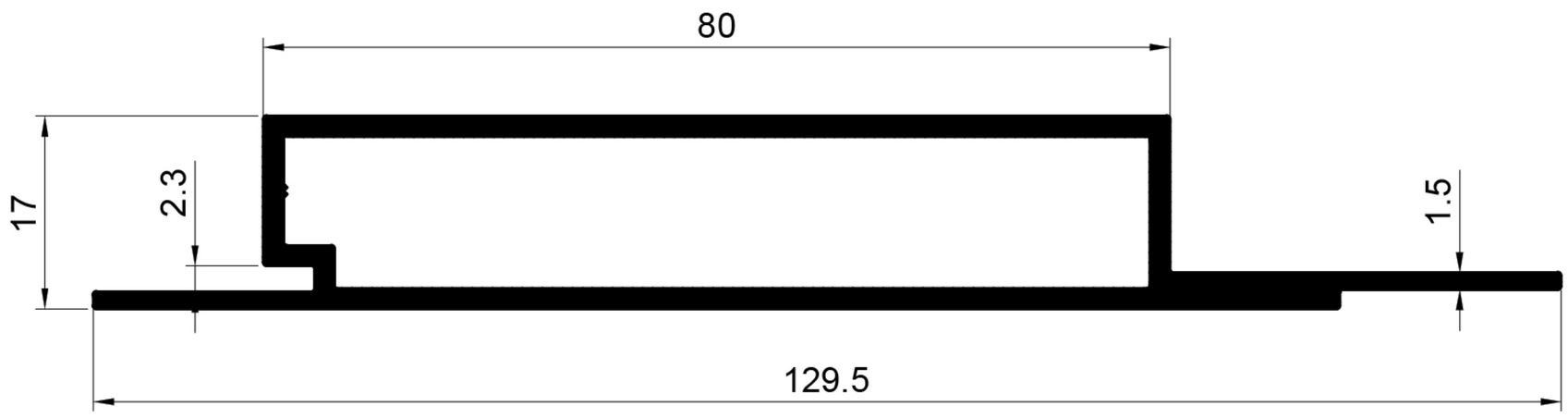

AT13017AM600

130 X 17 Tube Plate

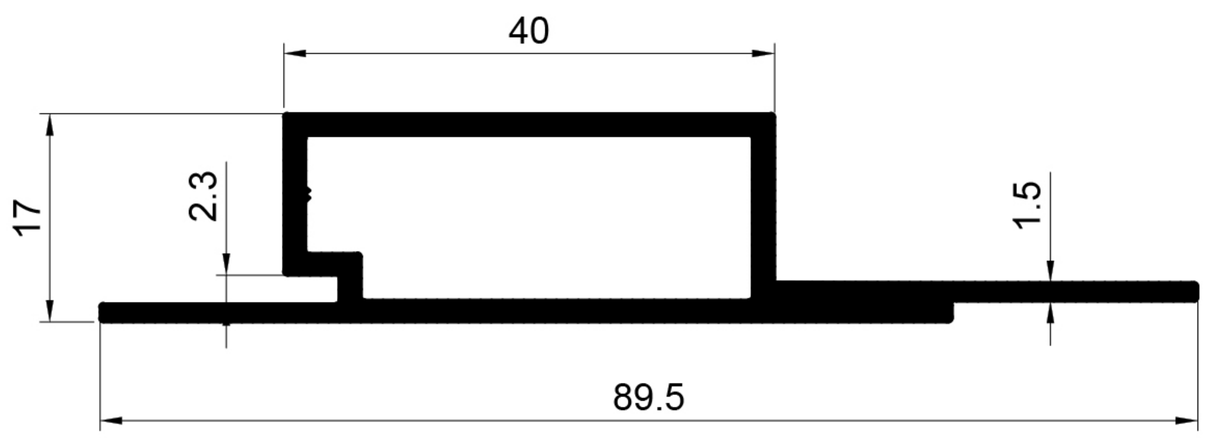

AT09017AM600

90 X 17 Tube Plate

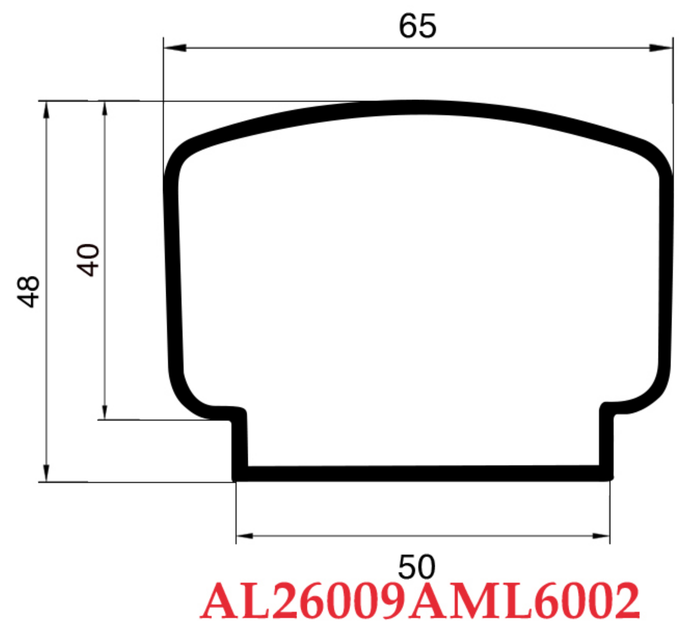

AL26009AML6002

Balcony Half Round Without Clip

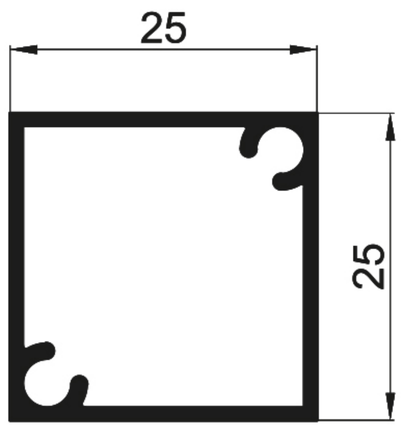

26020

25 x 25 Tube With Screw

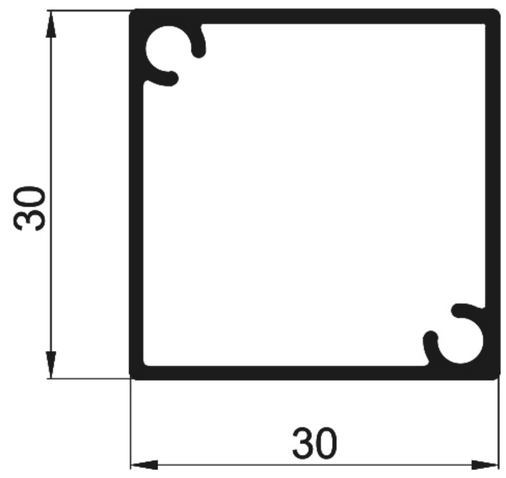

26021 12014L

30 x 30 Tube With Screw

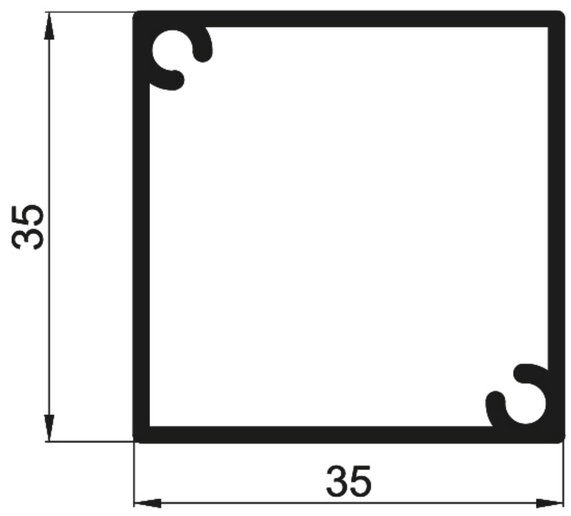

26022 12066

35 x 35 Tube With Screw

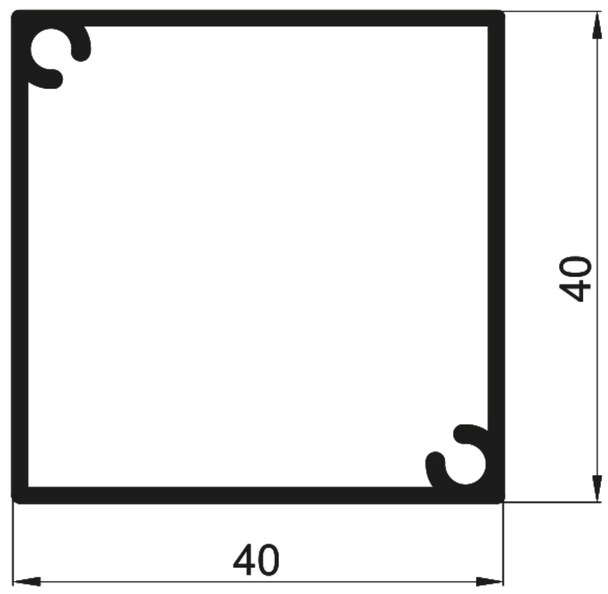

26023 12064A

40 x 40 Tube With Screw

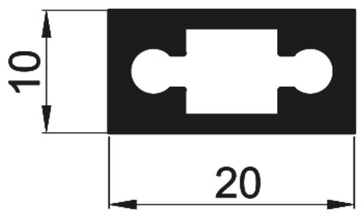

12085

10 x 20 Design Tube

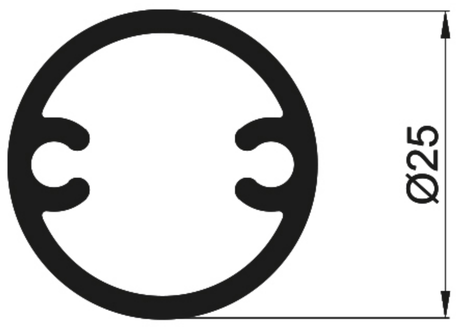

26034 12161

25mm Round Pipe With Screw

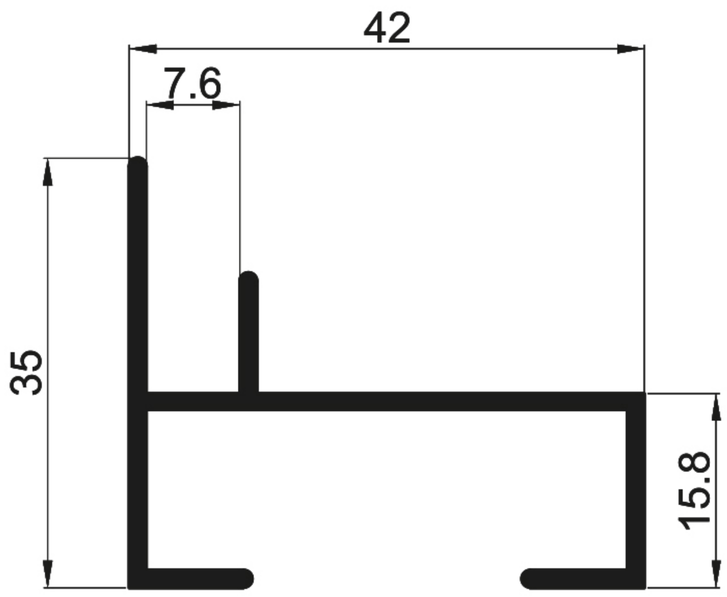

04267 09226

Amplime Frame

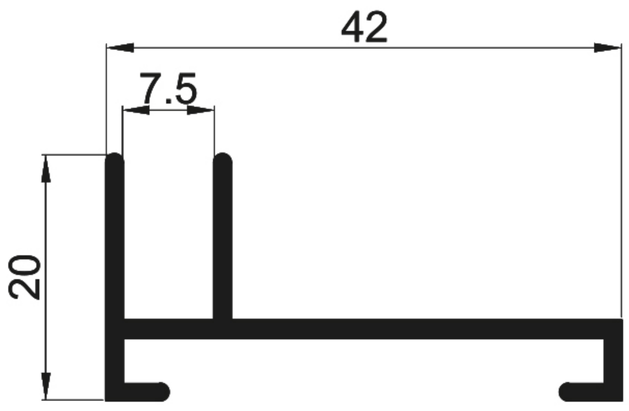

10229

Small Amplime Frame

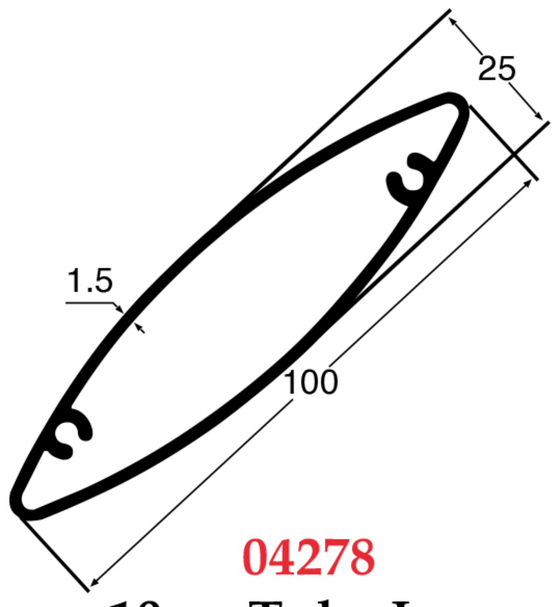

04278

10cm Tube Lover

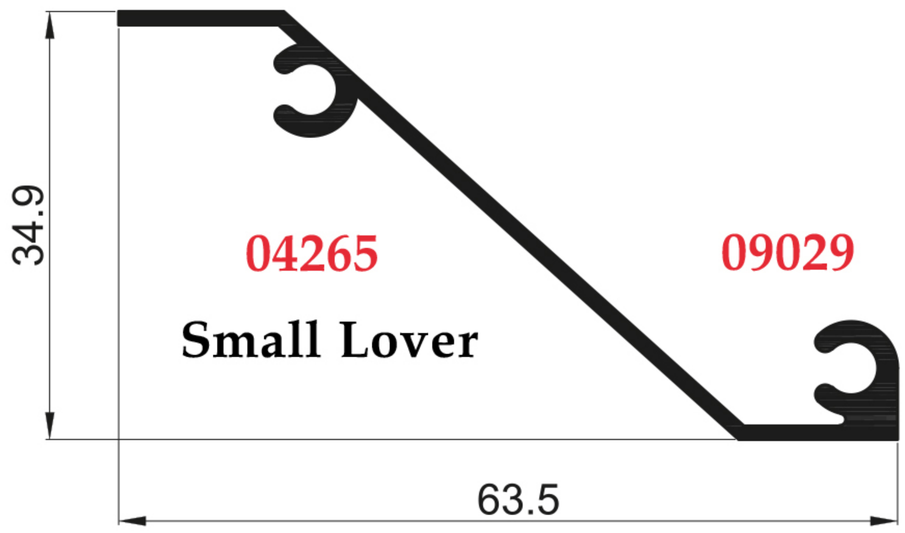

04265 09029

Small Lover

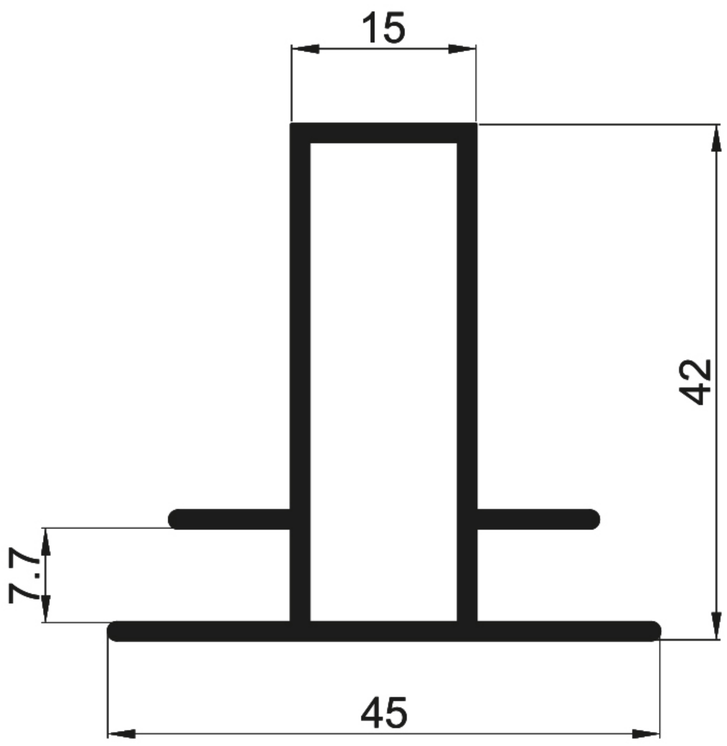

04269 12730

Amplime T

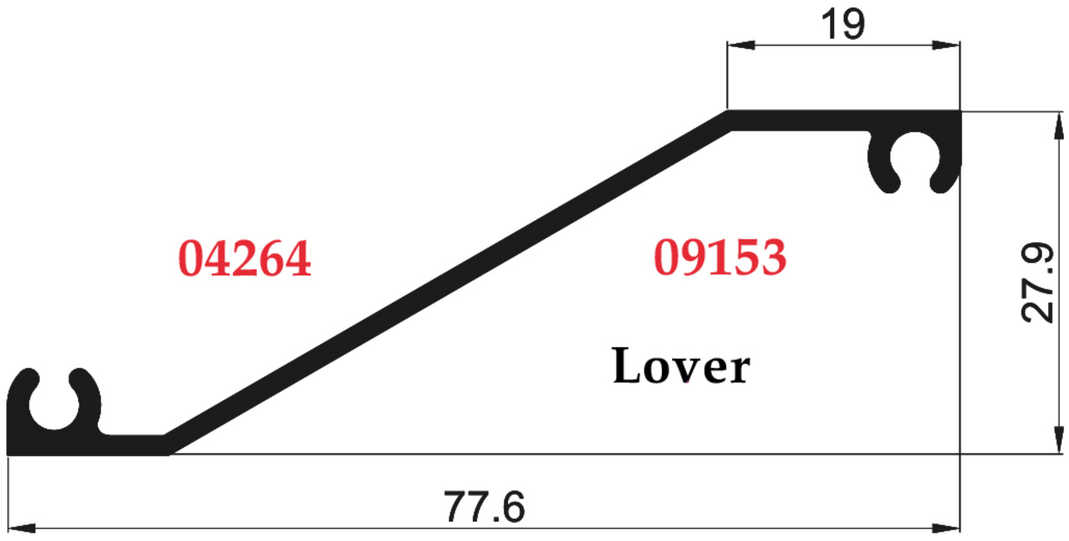

04264 09153

Lover

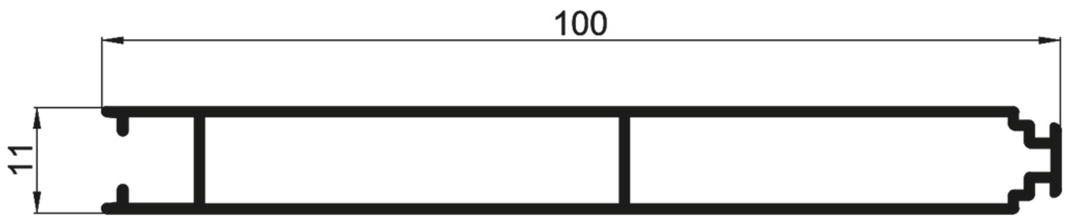

04263 14106

Box Type KIK Plate

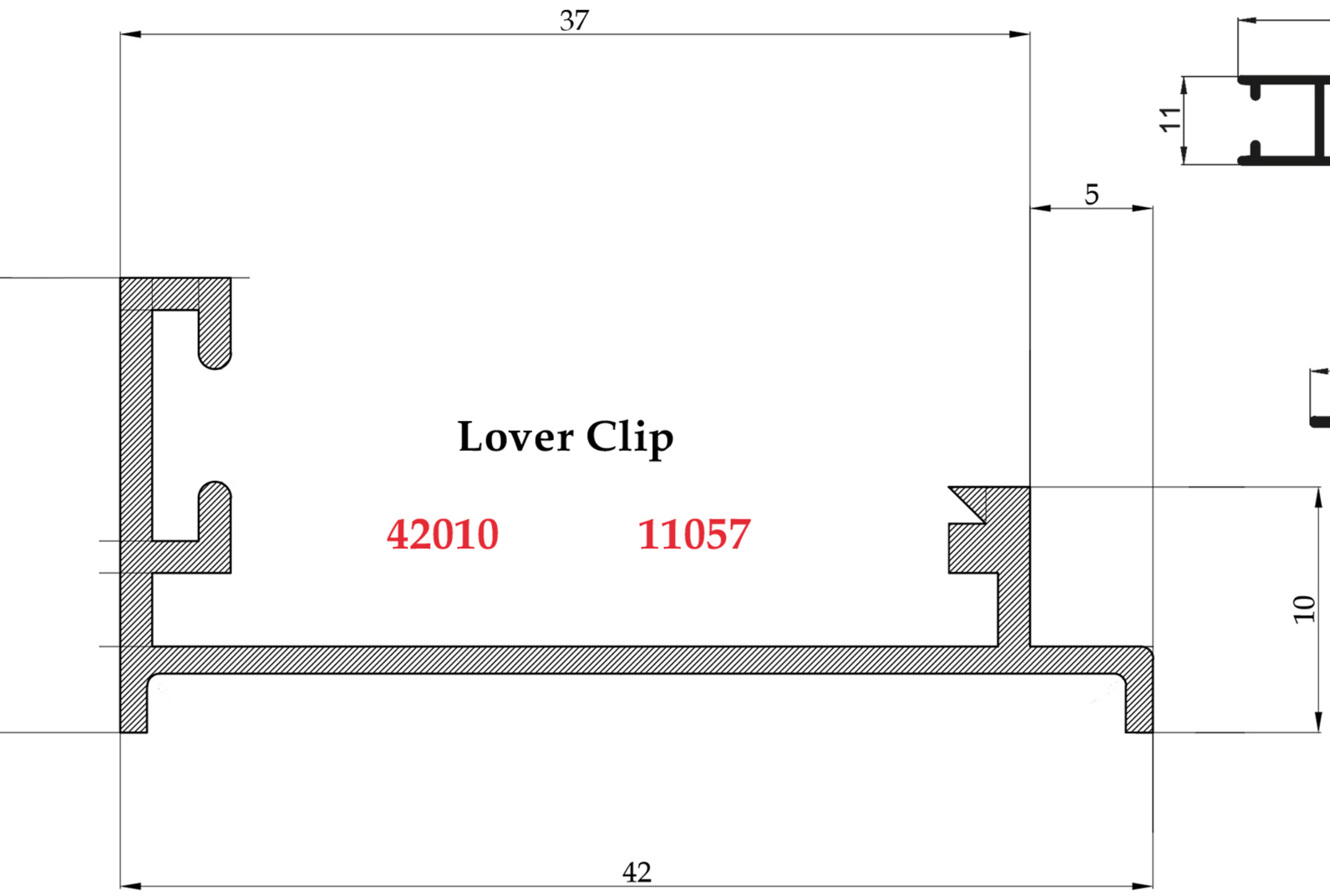

Lover Clip

42010 11057

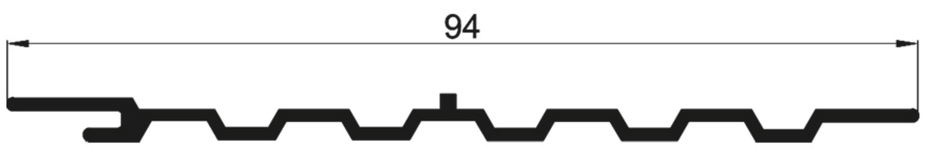

04262 09093L

Single KIK Plate

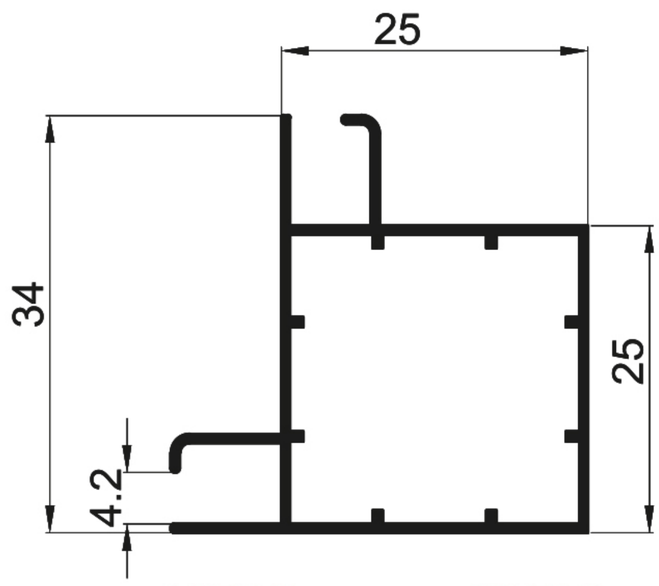

12512 12512

2 Way Side Ground

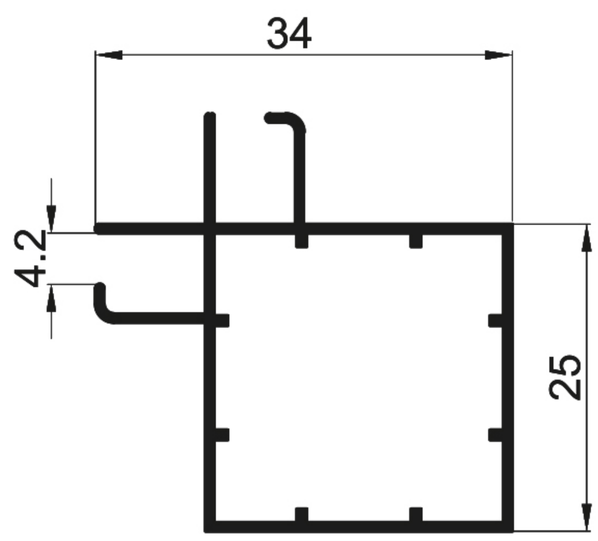

12506 13814

2 Way Double Pin

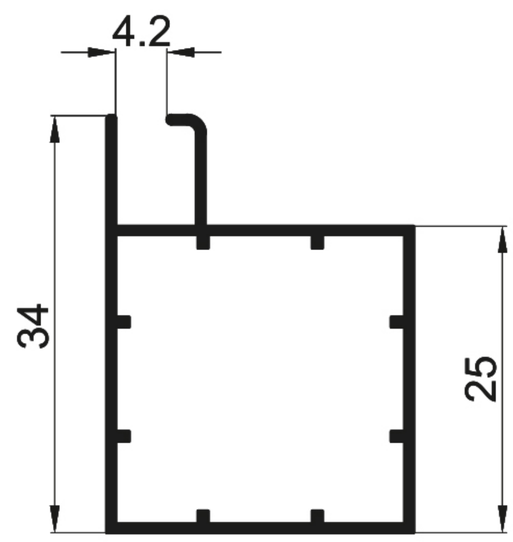

12504 13813

1 Way Single Pin

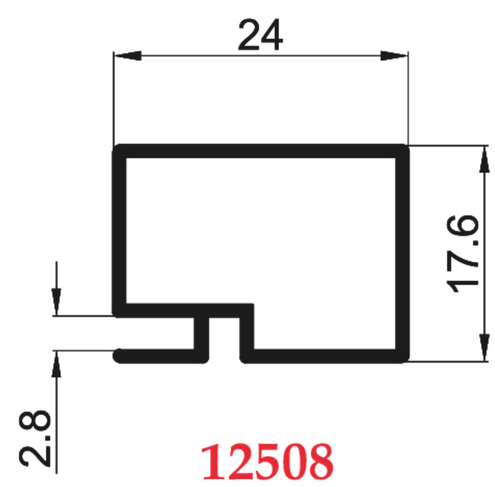

12508

Small Tube For Back

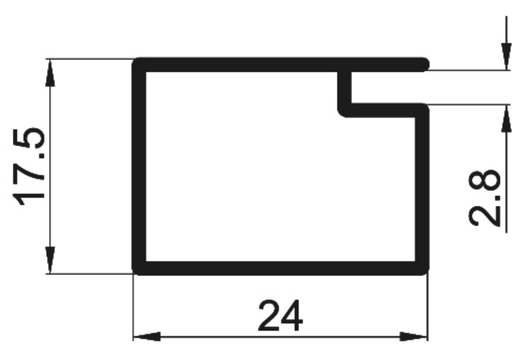

12507

1 Way Small

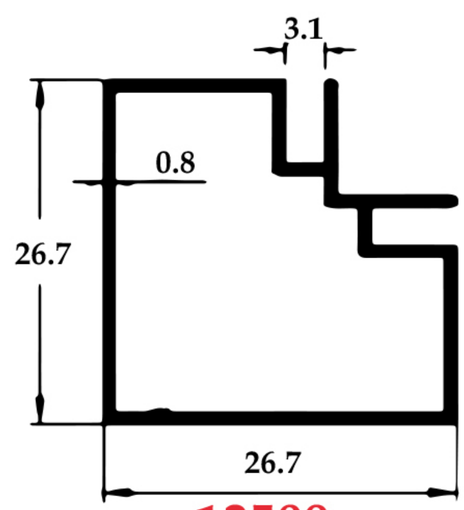

12509

Small 2 Way

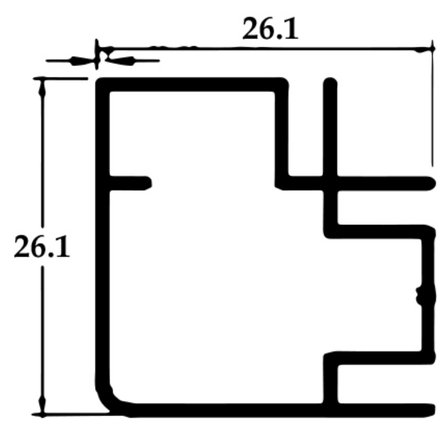

12514

Star Triple

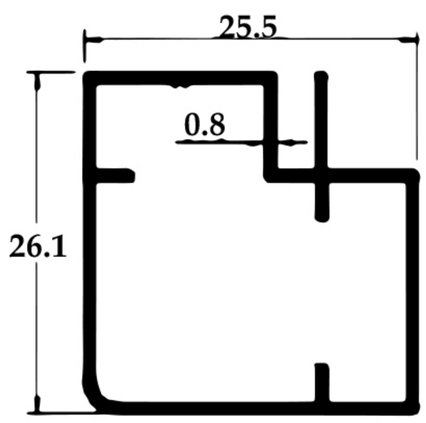

12513

Star Single

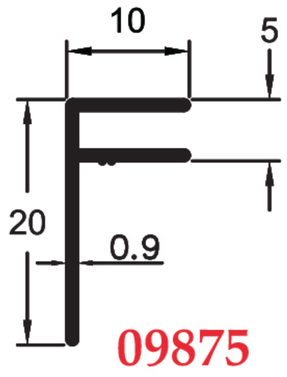

09875

Kitchen F

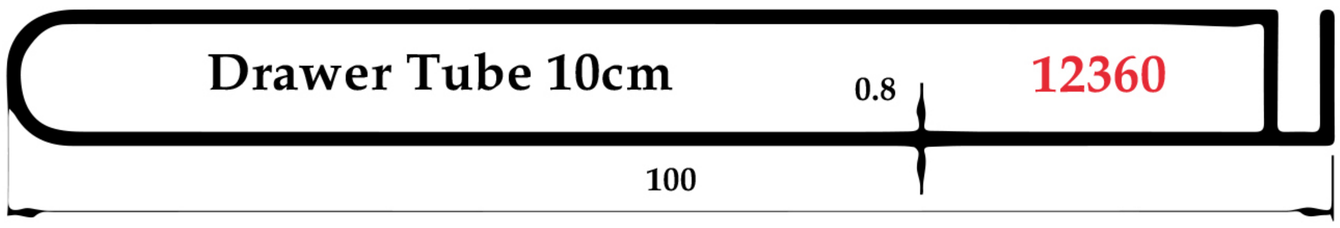

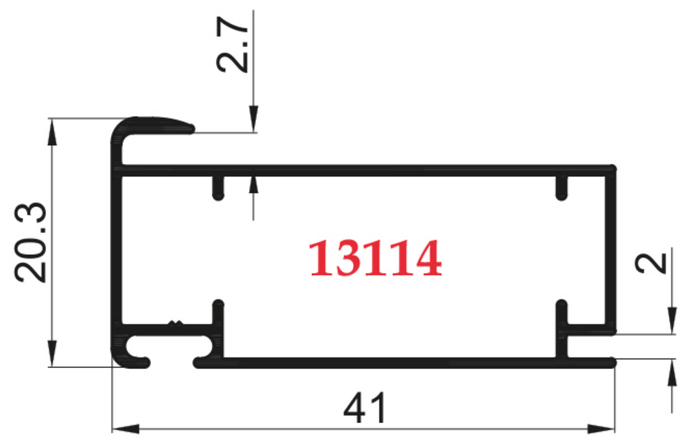

Sandwich Shutter Double

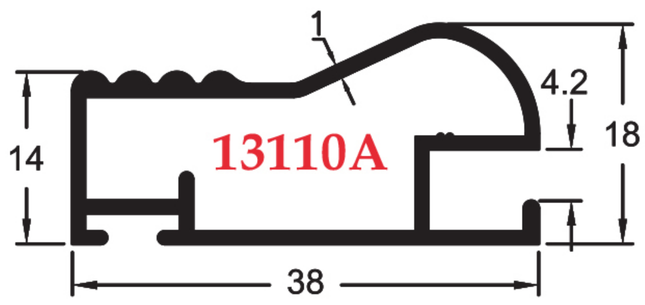

Kitchen Shutter ADI

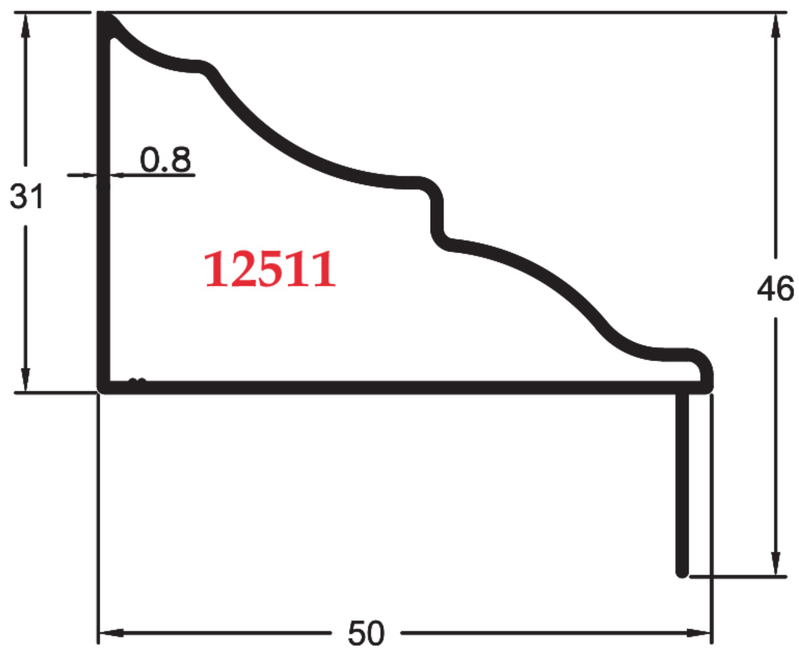

Kornish

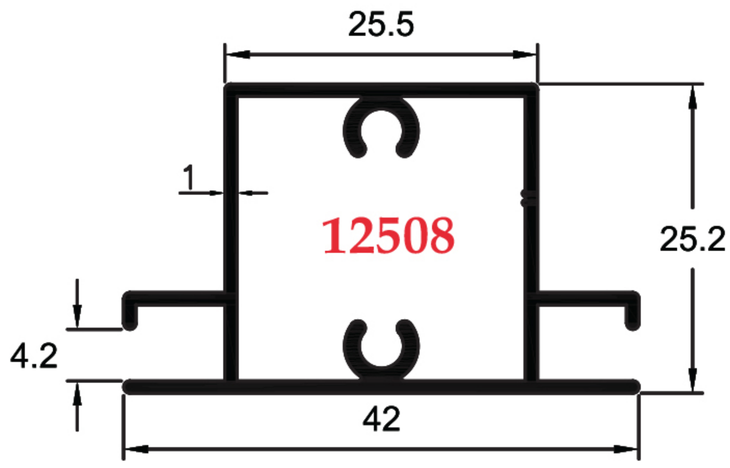

Kitchen T 25 x 25mm

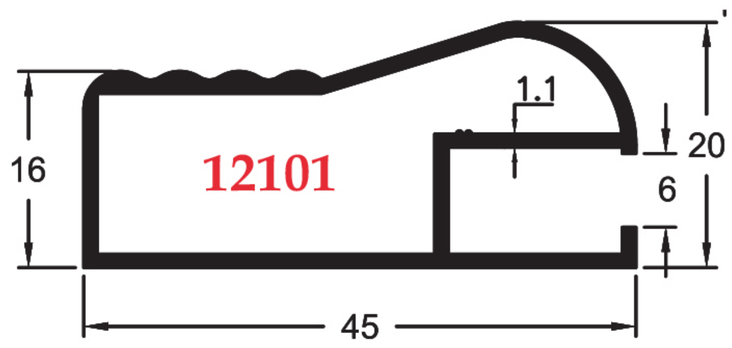

Shutter ADI 6mm

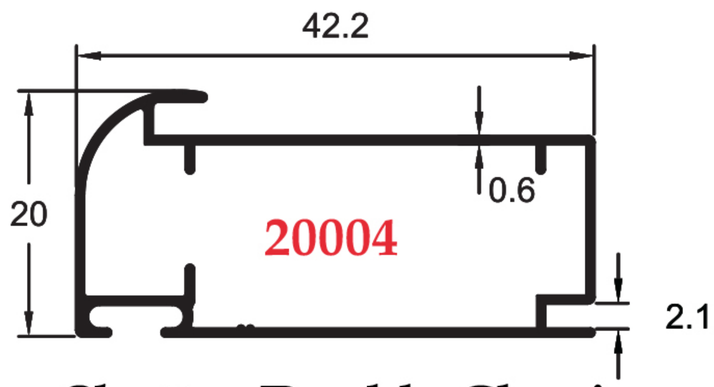

Shutter Double Classic

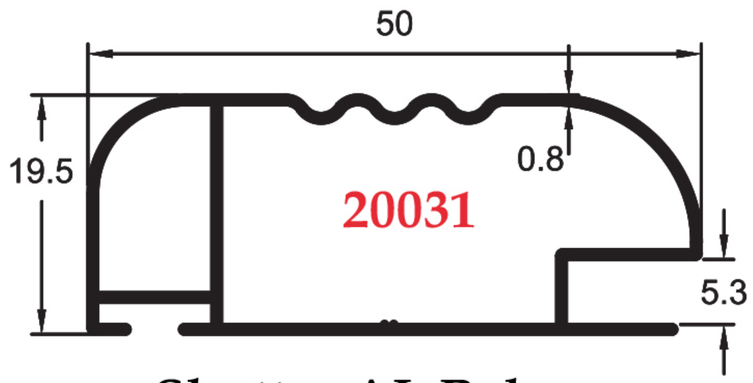

Shutter AL Raheem

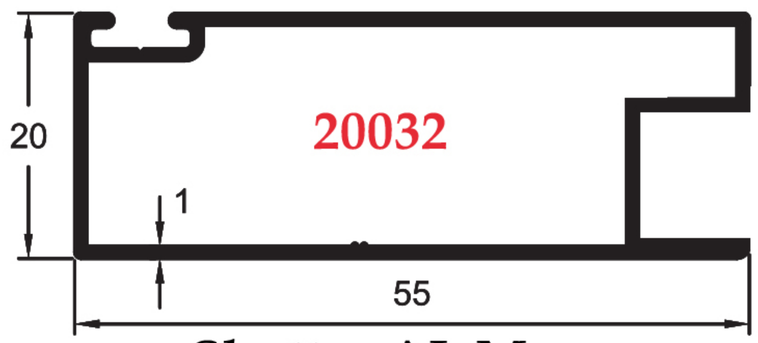

Shutter AL Moez

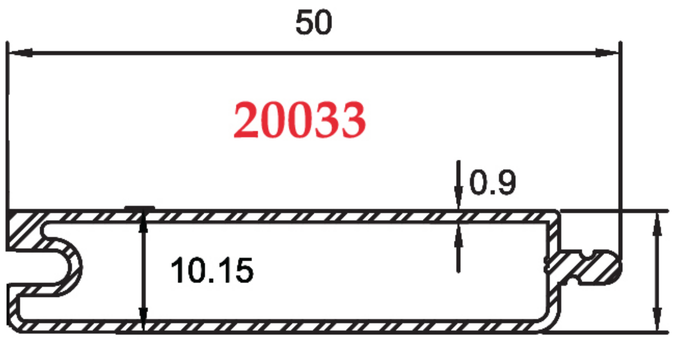

Strip For AL Moez

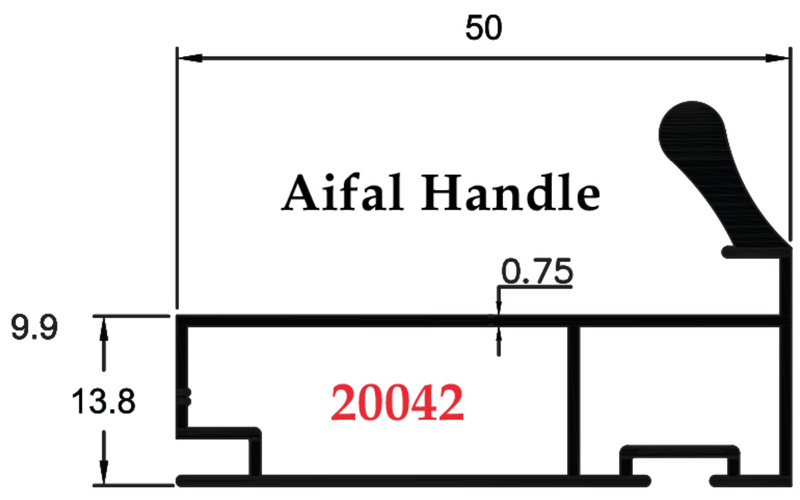

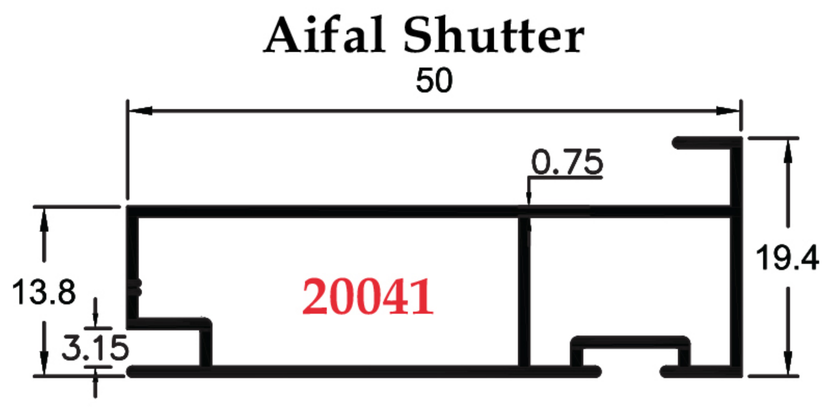

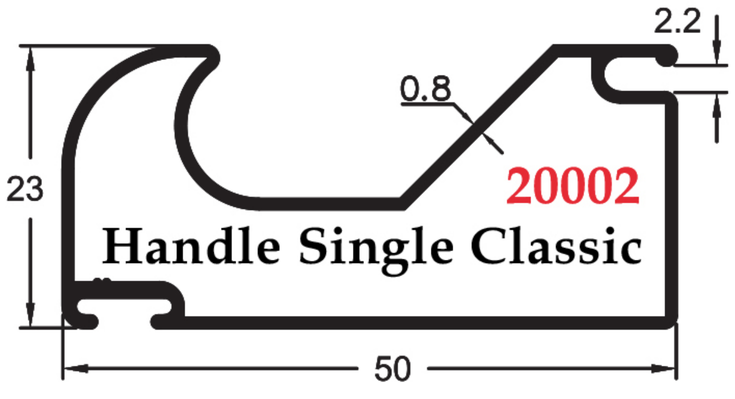

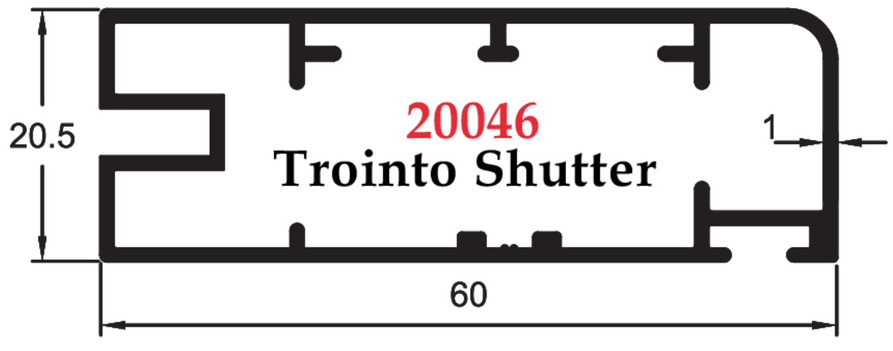

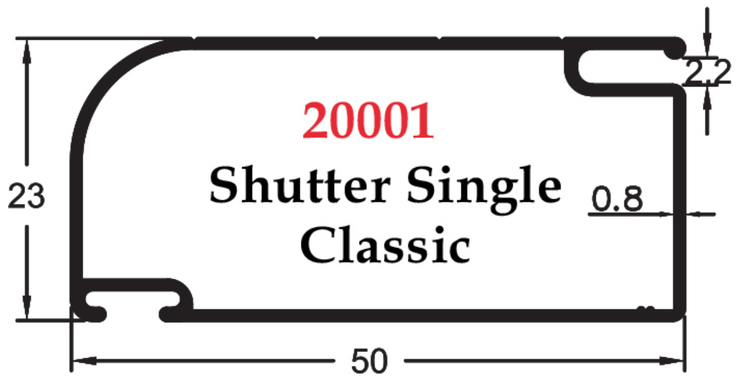

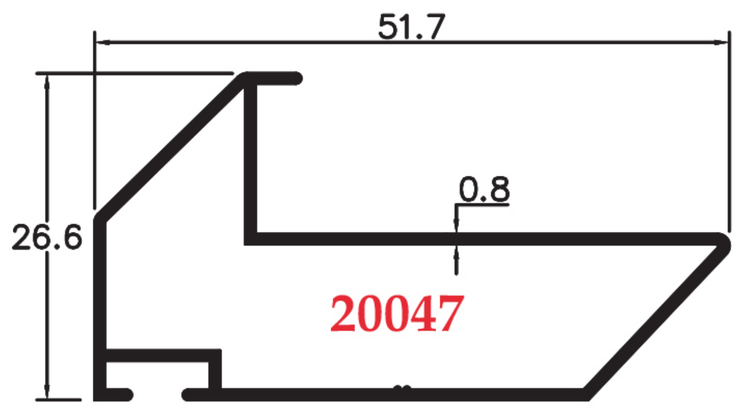

German Shutter

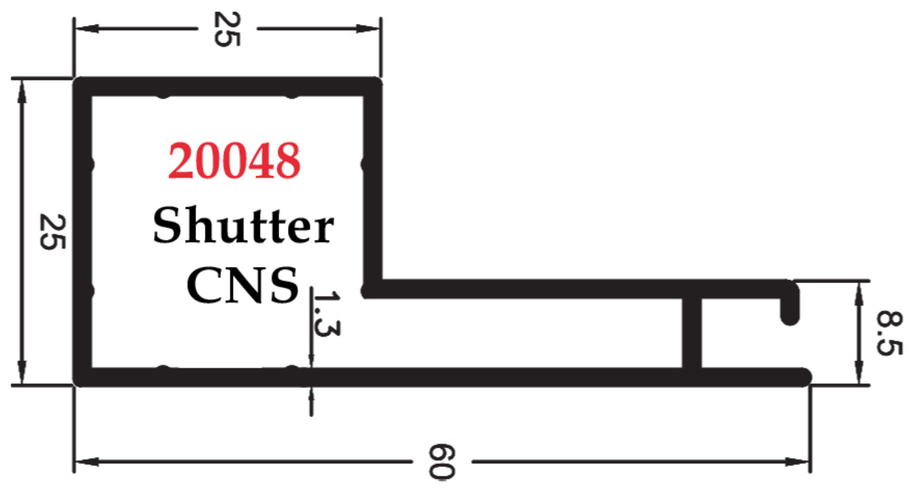

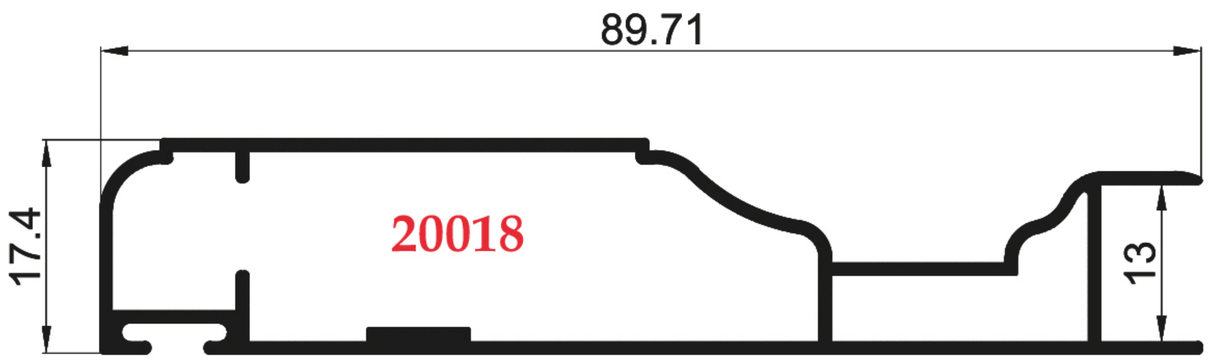

Shutter Italian

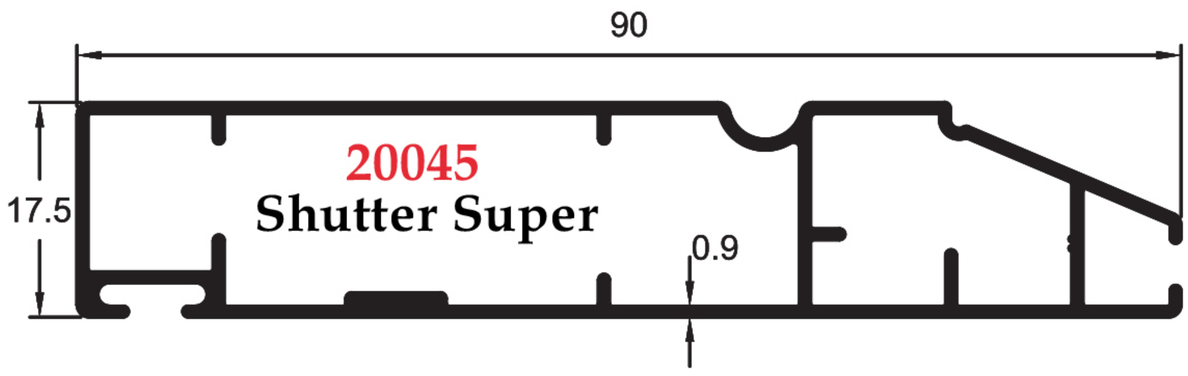

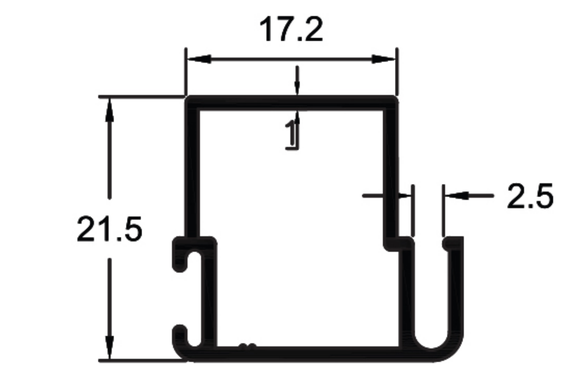

20003
Clip For Single Classic

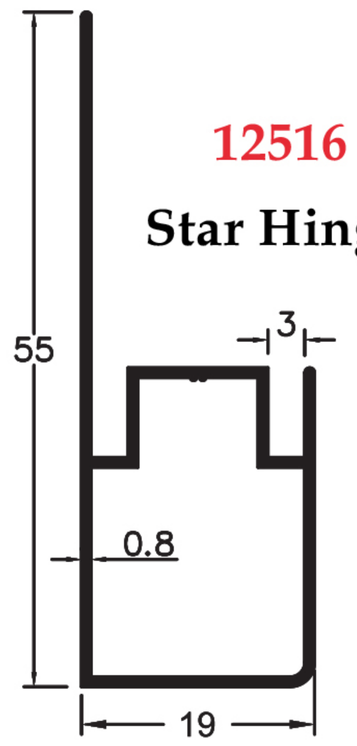

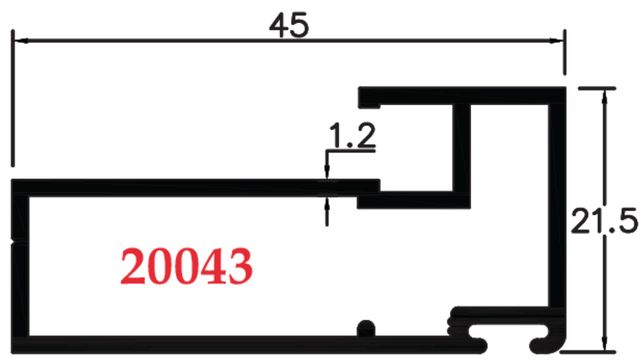

Single Sandwich For Glass

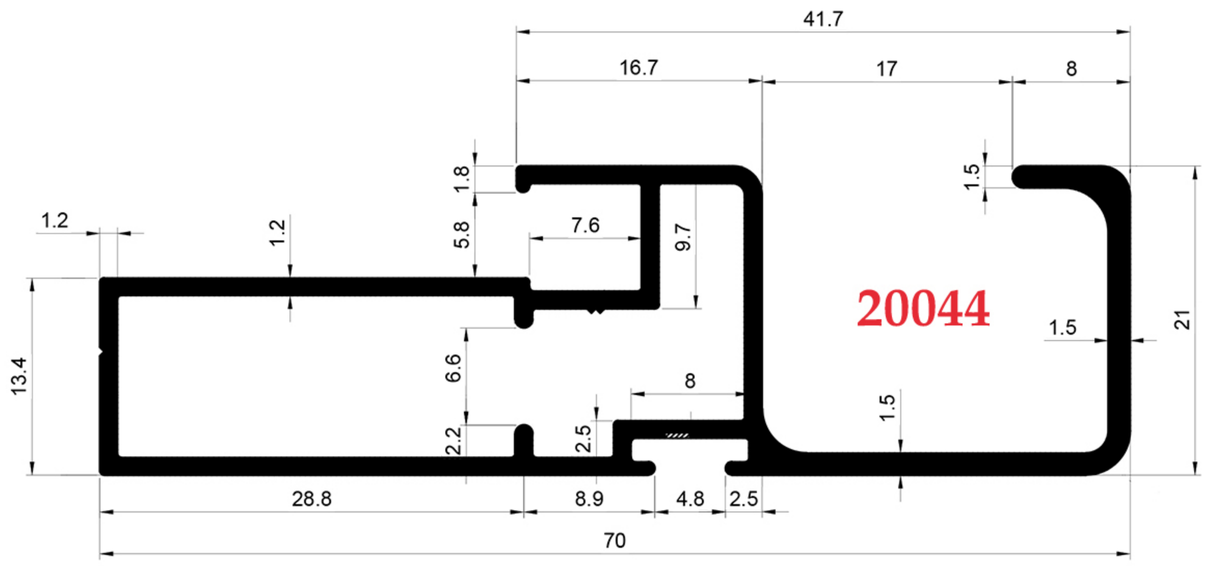

Handle For Single Sandwich

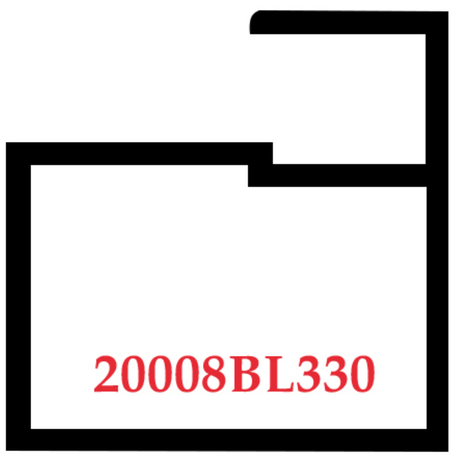

Frame 20 Series
Profile Black

Frame 20 Series
Profile Golden

20008G290L
Frame 20 Series
Handle Left Golden

20008G290R
Frame 20 Series
Handle Right Golden

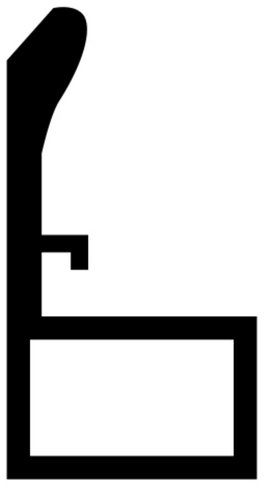

20008BL290L
Frame 20 Series
Handle Left Black

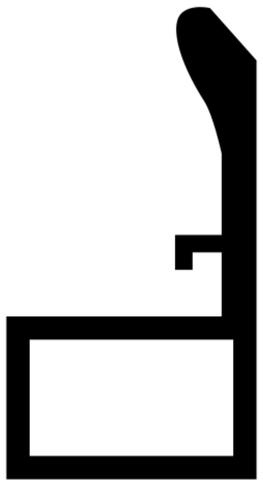

20008BL290R
Frame 20 Series
Handle Right Black

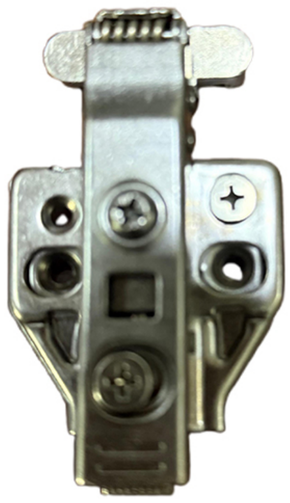

AS20-06
Hinges For
20 Series Frame

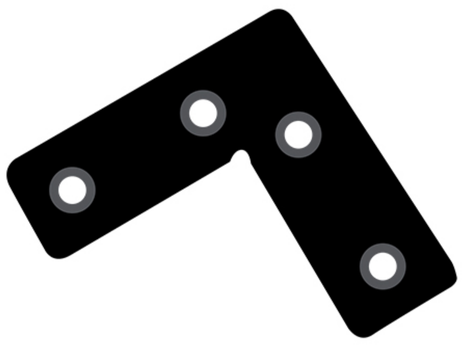

AS20-01
45MM Angle For
20 Series Frame

HD196AL-4
3D Hydraulic Hinges
For Single Sandwich

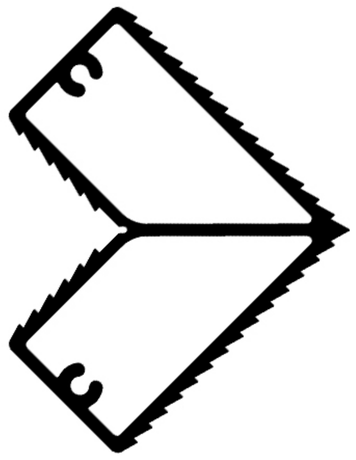

MF12636ML600
26.5MM Single
Sandwich Angle

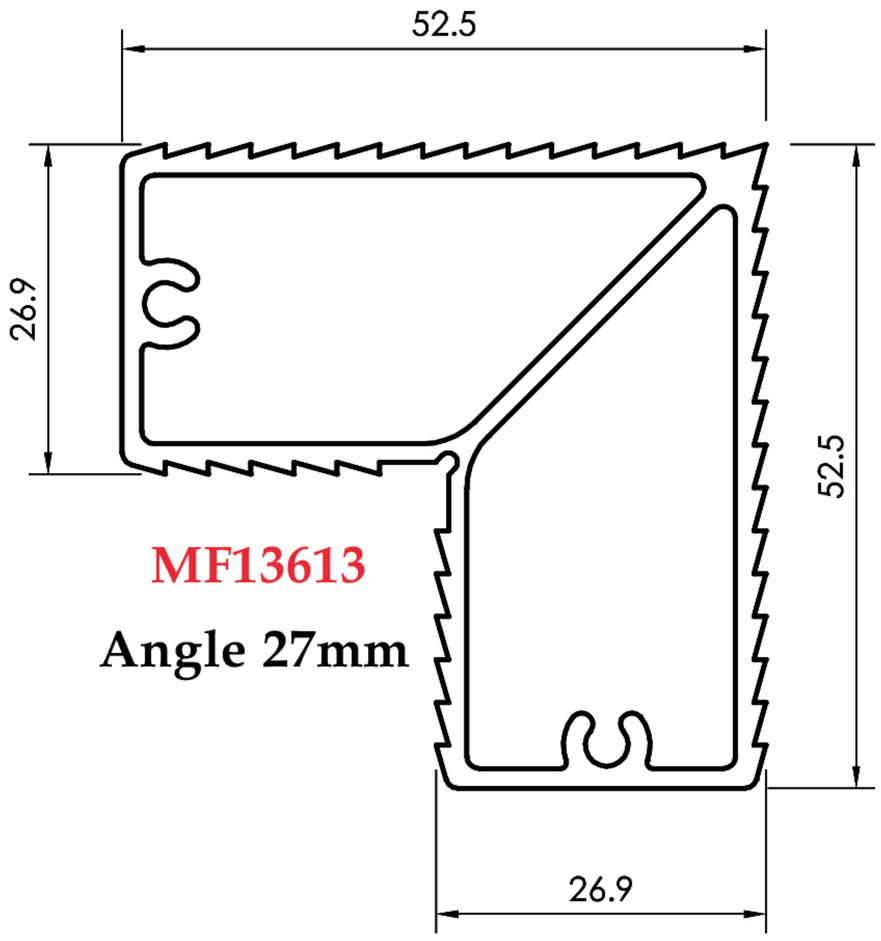

MF13613

Angle 27mm

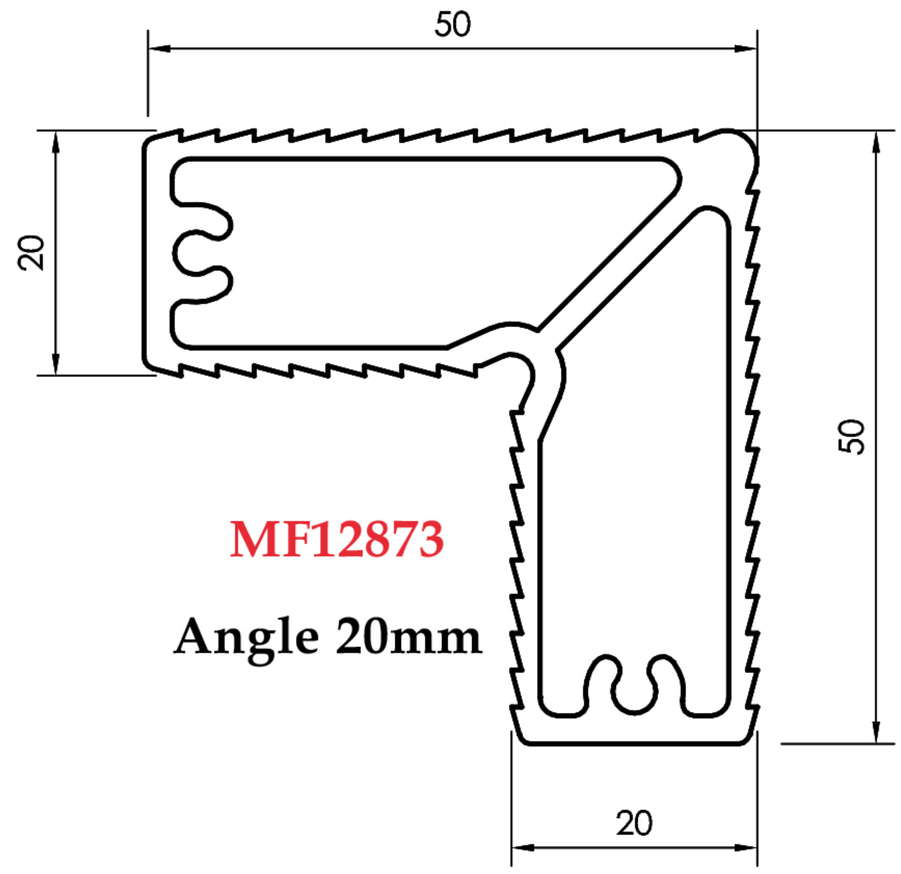

MF12873

Angle 20mm

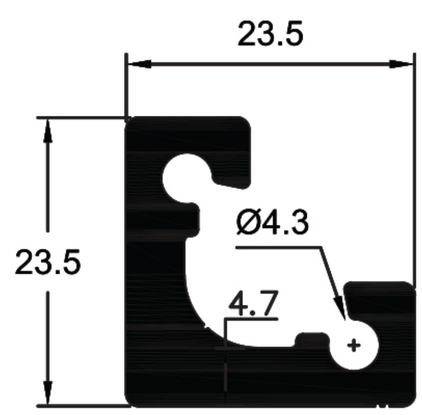

MF12509-ANG

Angle For 12509

MF12507-ANG

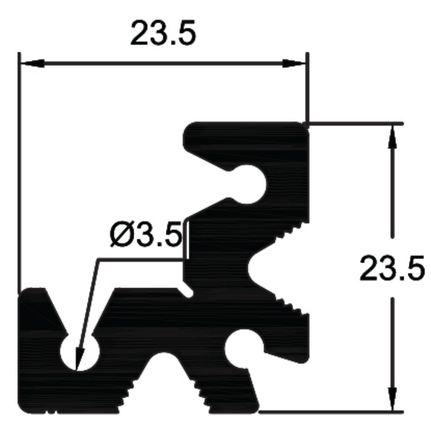

Angle For 12507

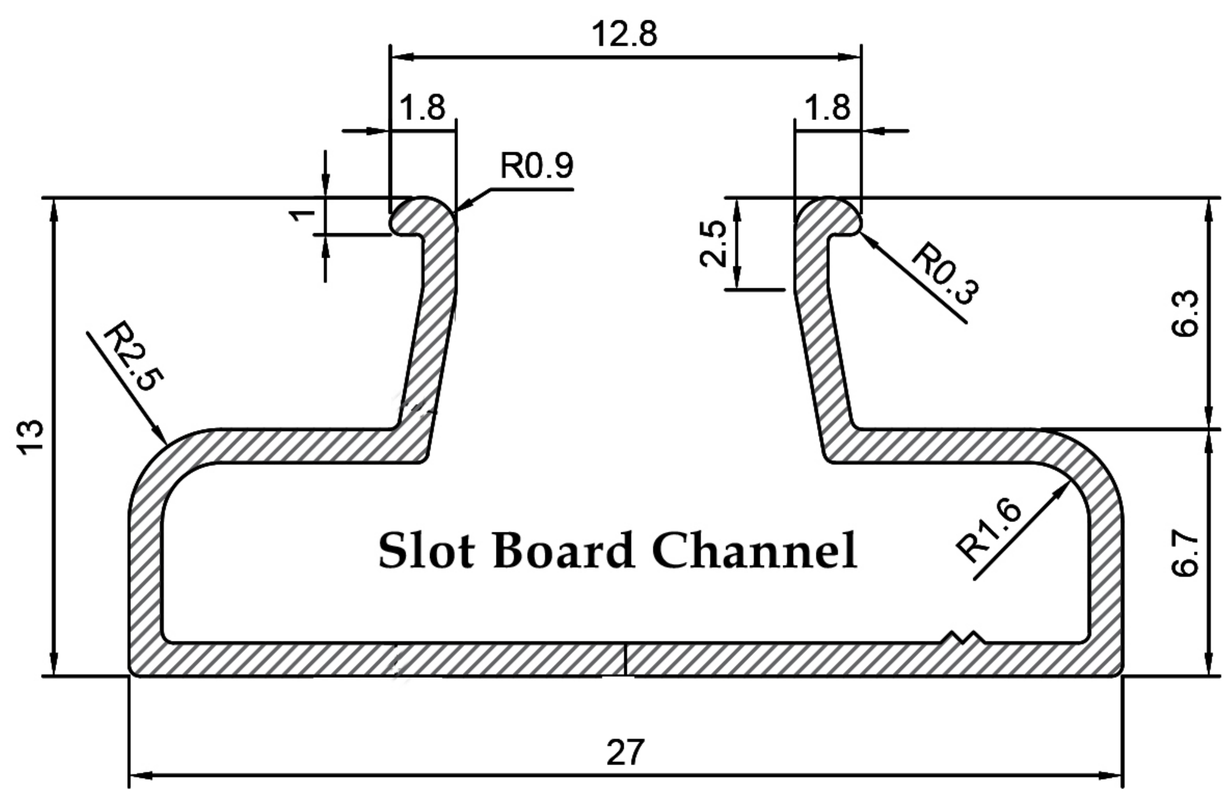

MF11372

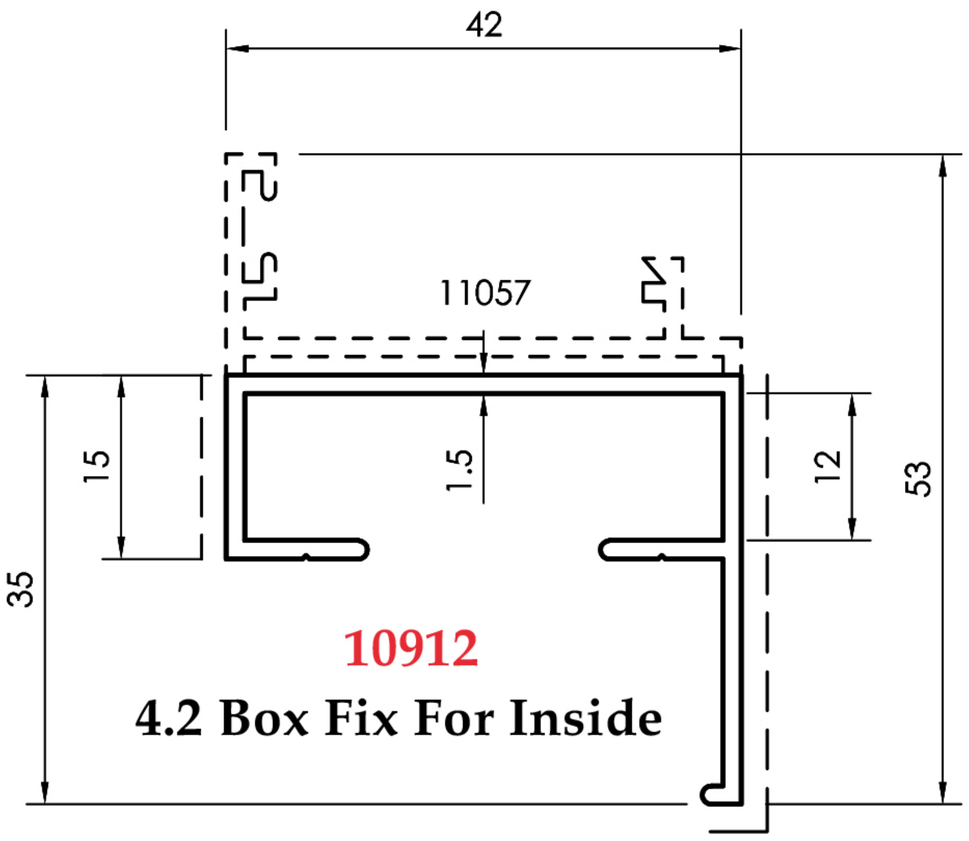

10912
4.2 Box Fix For Inside

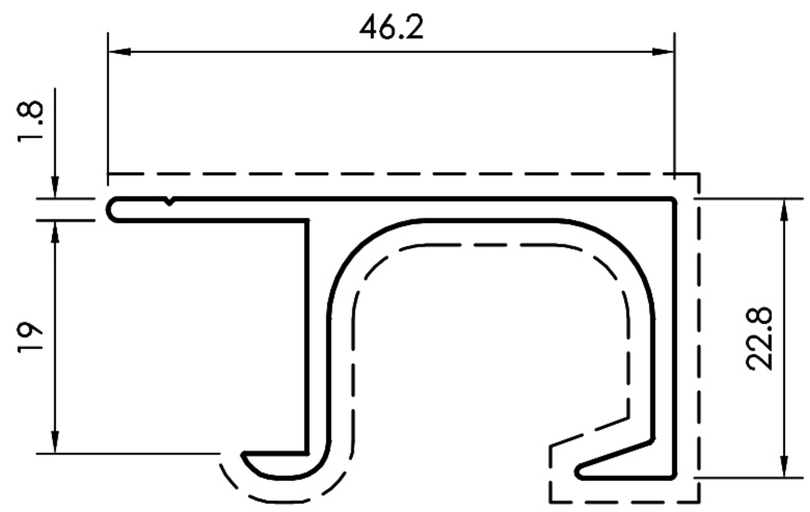

AP220 09372
Cupboard Handle

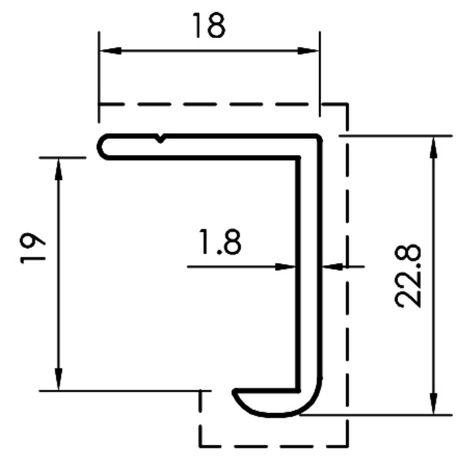

AP221 09371
Cupboard L

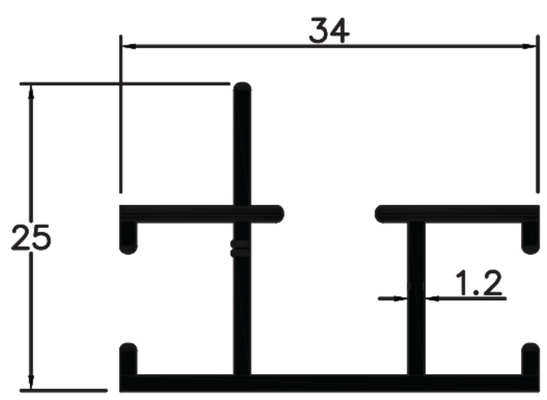

AC17A
Small Counter Bottom

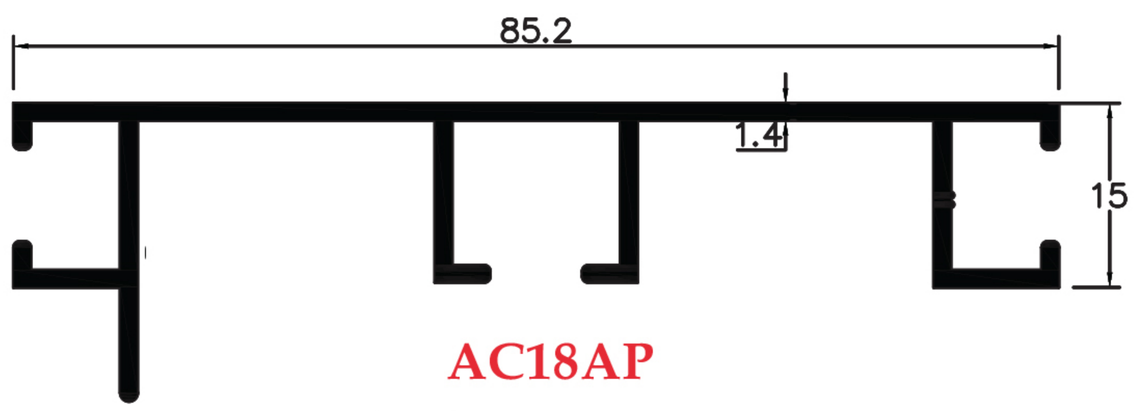

AC18AP
Big Counter Bottom

MF30001

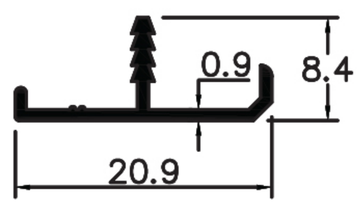

MDF Strip 20.9mm

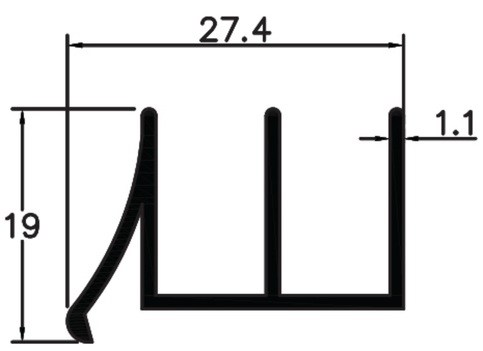

AP338
6mm Glass Sliding

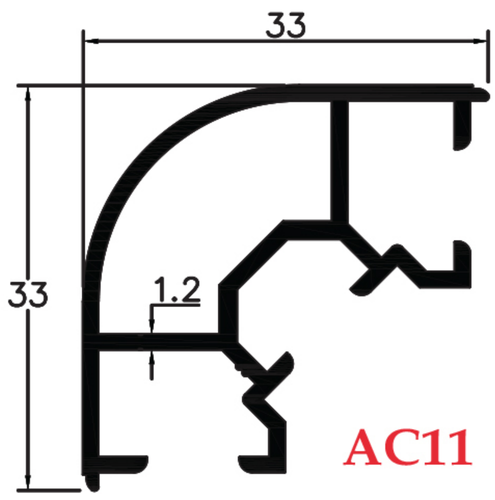

AC11
90 Degree Round Profile

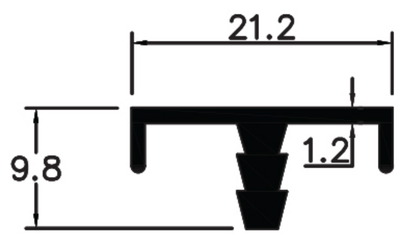

MF30002
MDF Strip 21.2mm

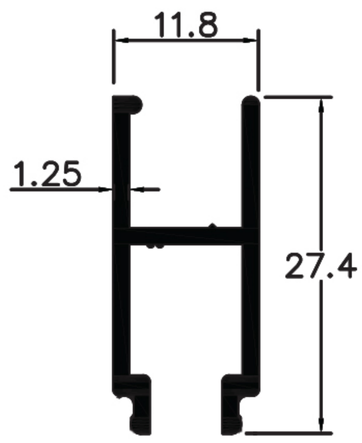

AC21
Sliding Shutter Bottom

AC20A

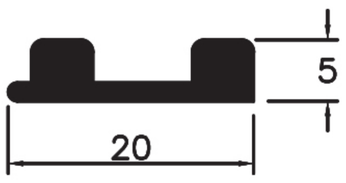

Sliding Bottom Plain

AC20

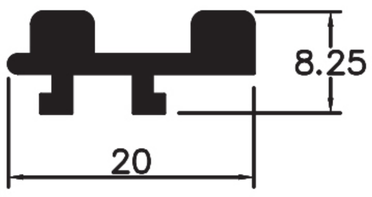

Sliding Bottom

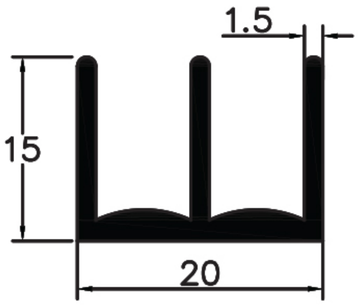

AC19A
Sliding Top Plain

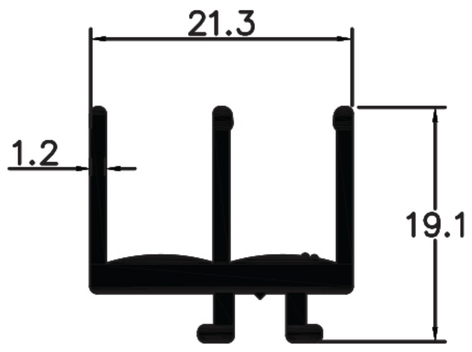

AC19
Sliding Top

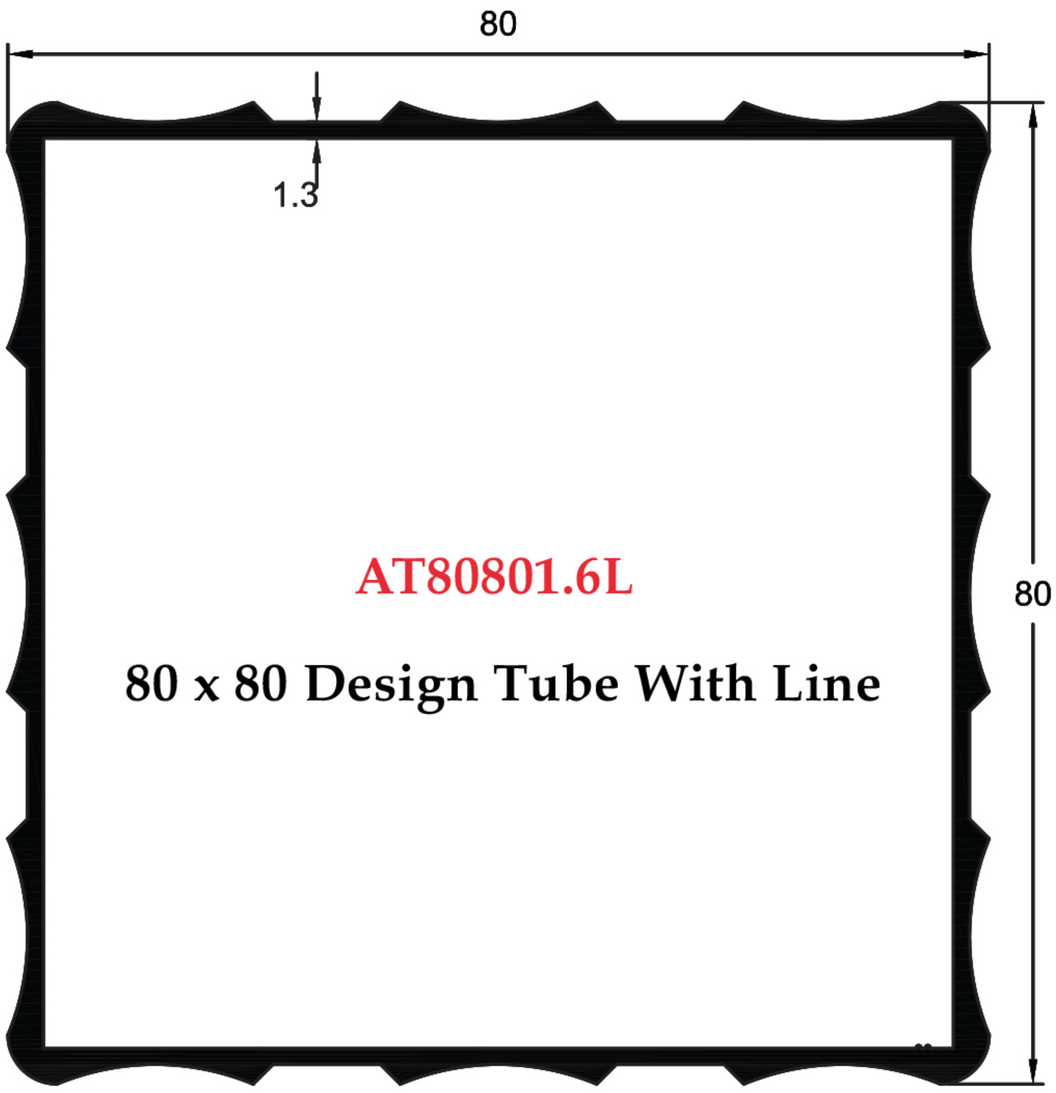
80
1.3
80
AT80801.6L
80 x 80 Design Tube With Line

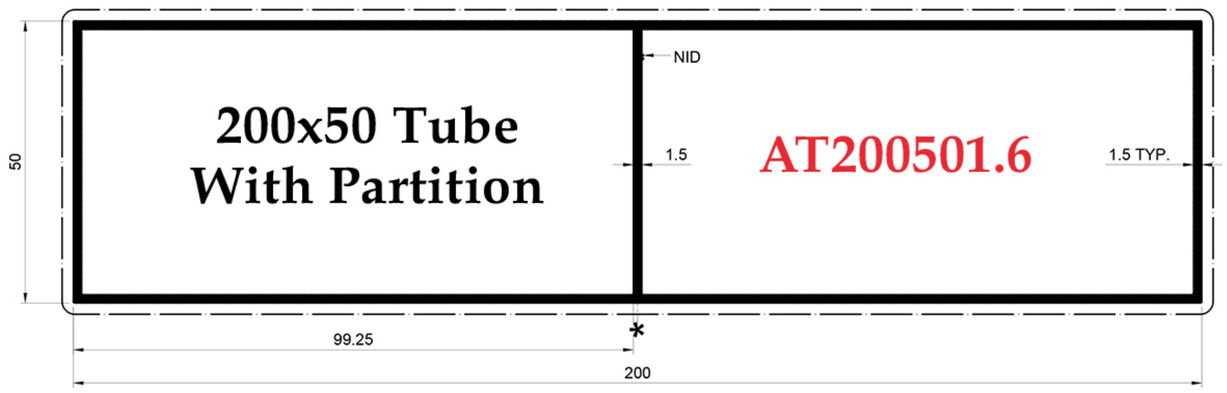
NID
50
200x50 Tube
With Partition
1.5
AT200501.6
1.5 TYP.
99.25
*
200

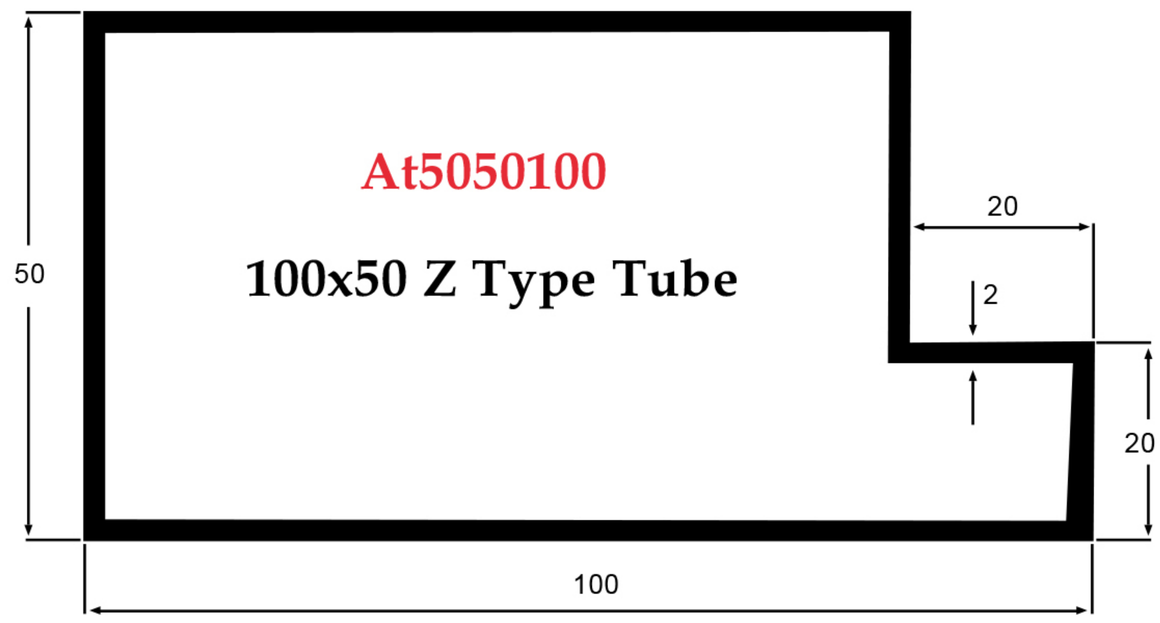
At5050100
100x50 Z Type Tube
50
20
2
20
100

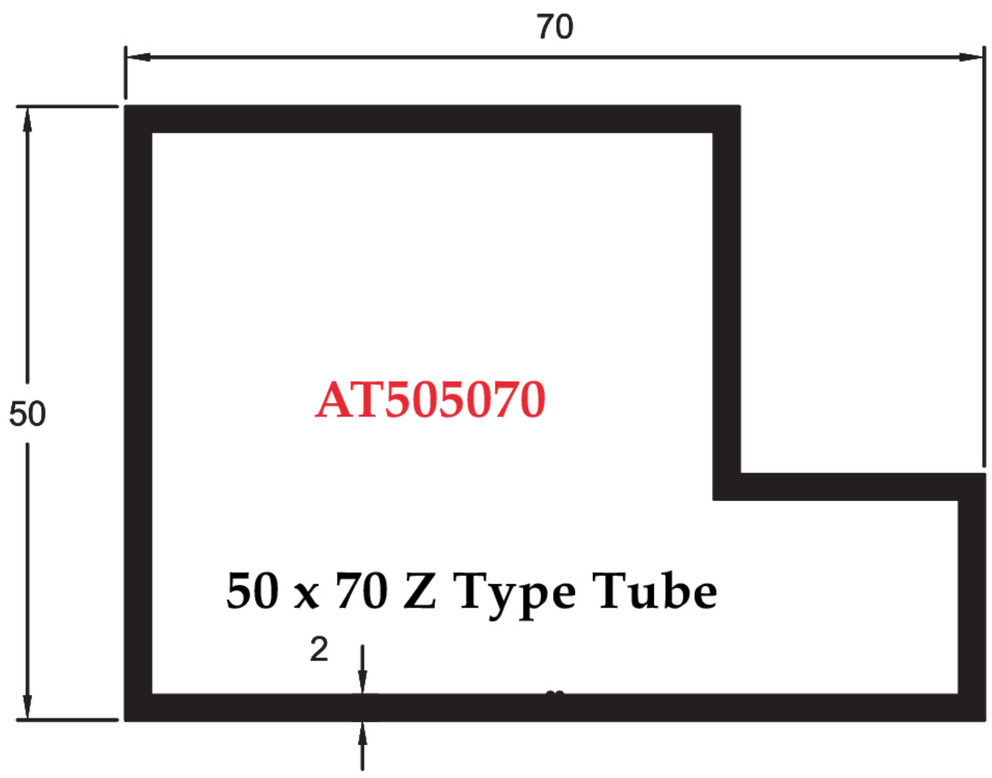
70
50
AT505070
50 x 70 Z Type Tube
2

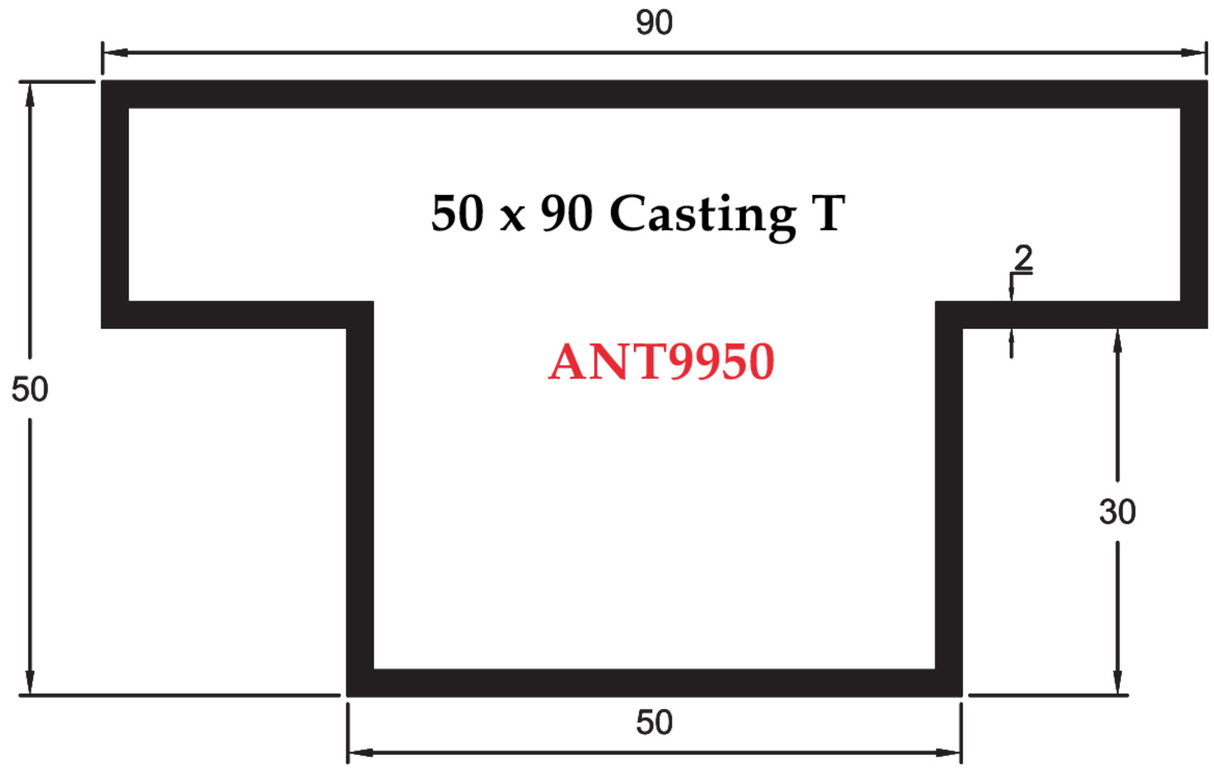
90
50 x 90 Casting T
2
ANT9950
50
30
50

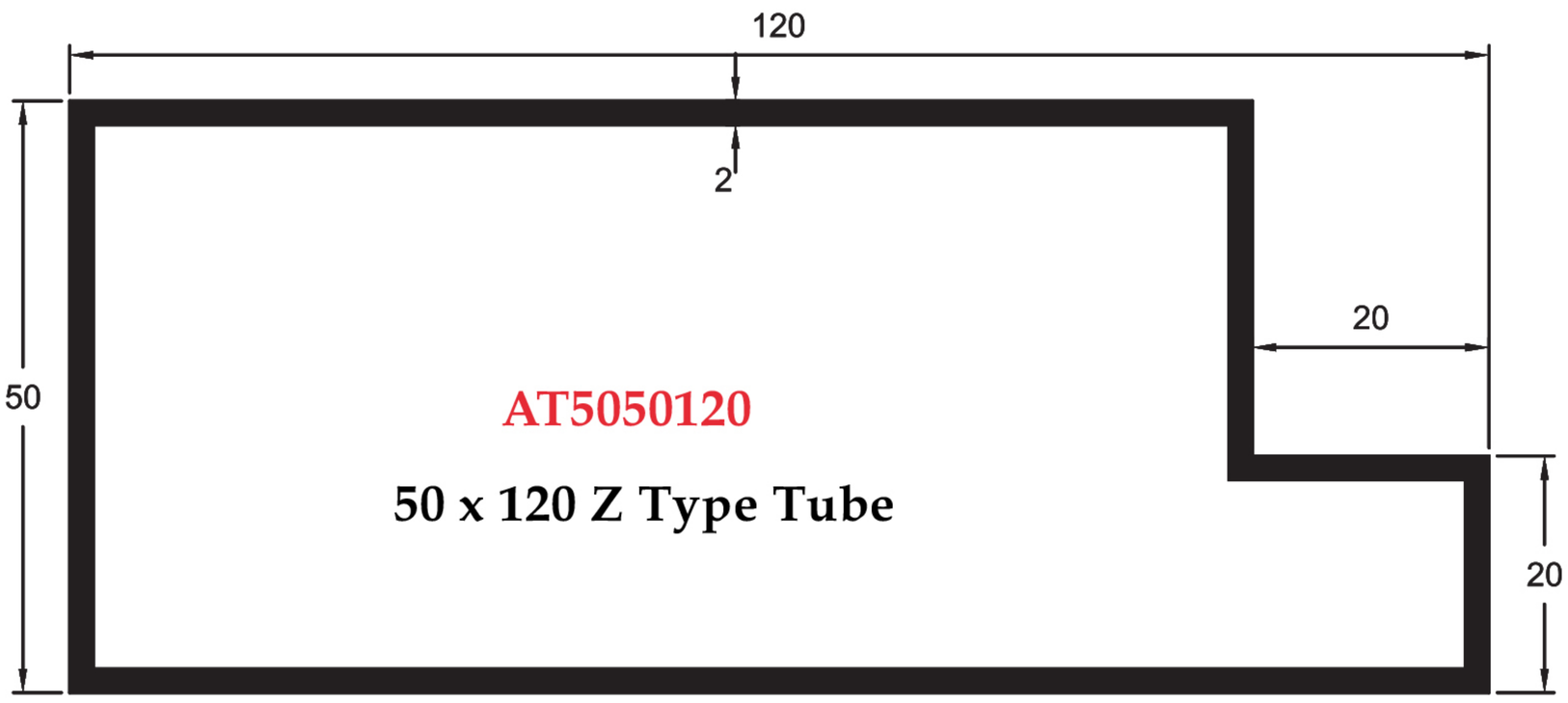
120
2
20
50
AT5050120
50 x 120 Z Type Tube
20

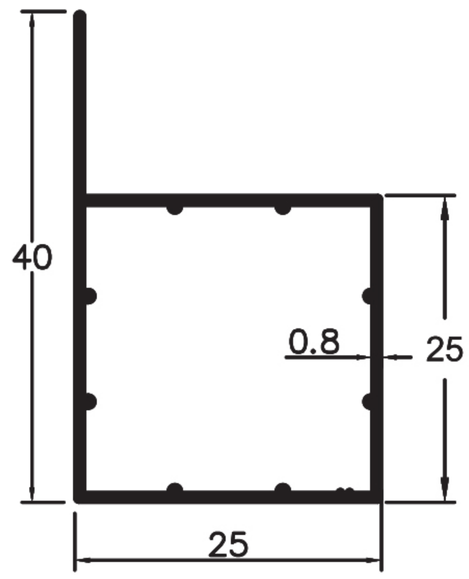

AT2525OL

25 x 25 Tube Overlap

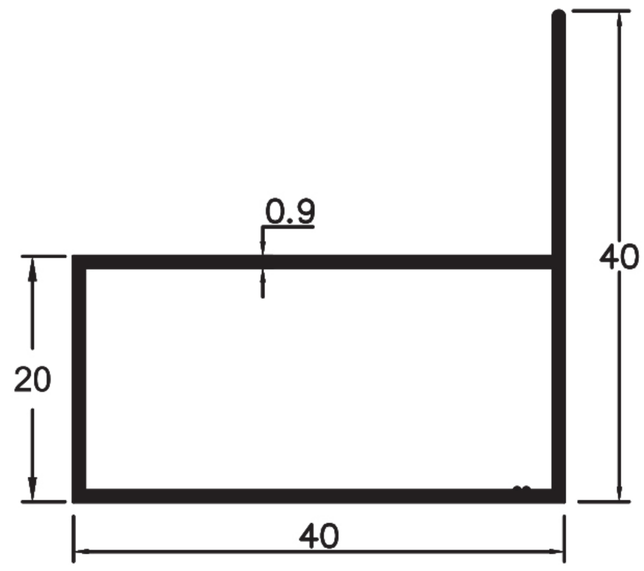

AT4020OL

40 x 20 Overlap Tube

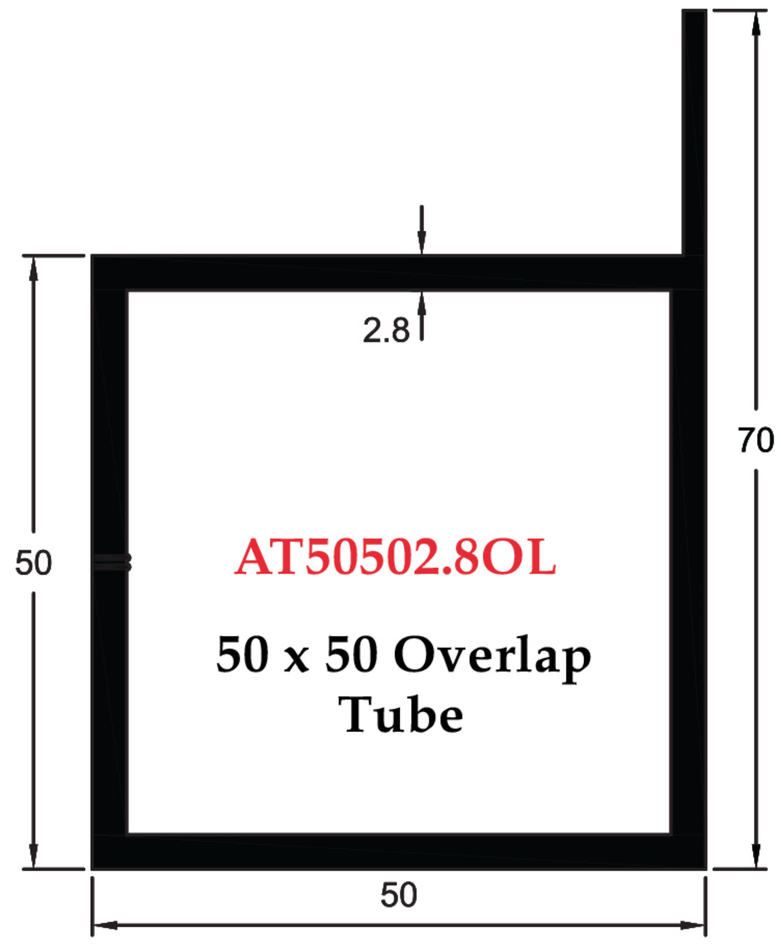

AT50502.8OL

50 x 50 Overlap Tube

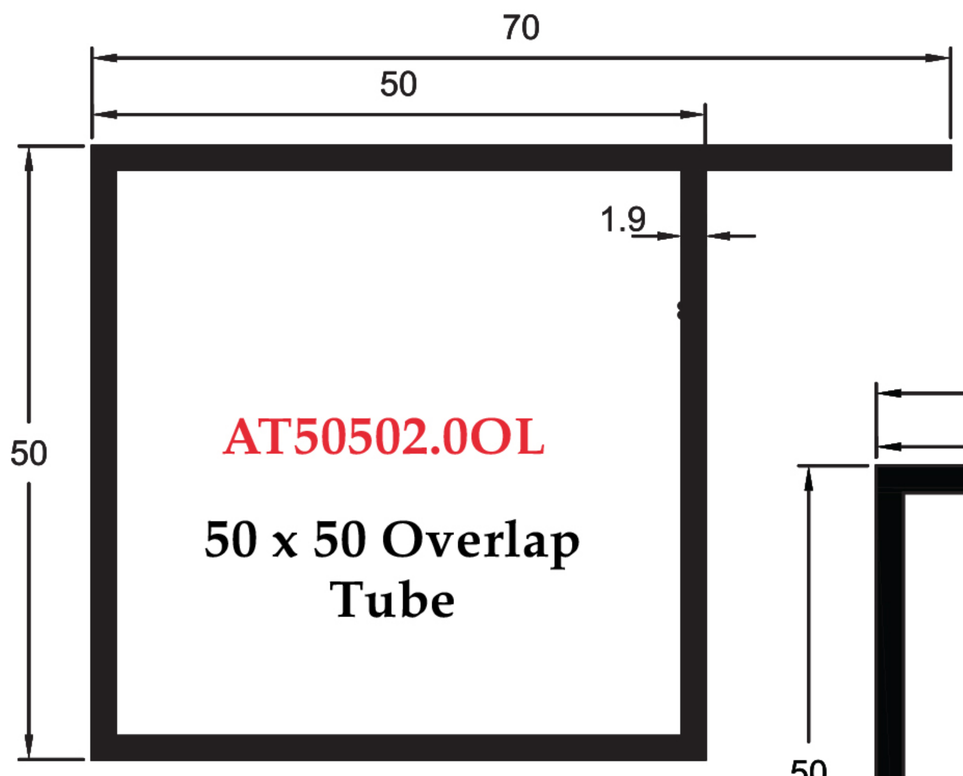

AT50502.0OL

50 x 50 Overlap Tube

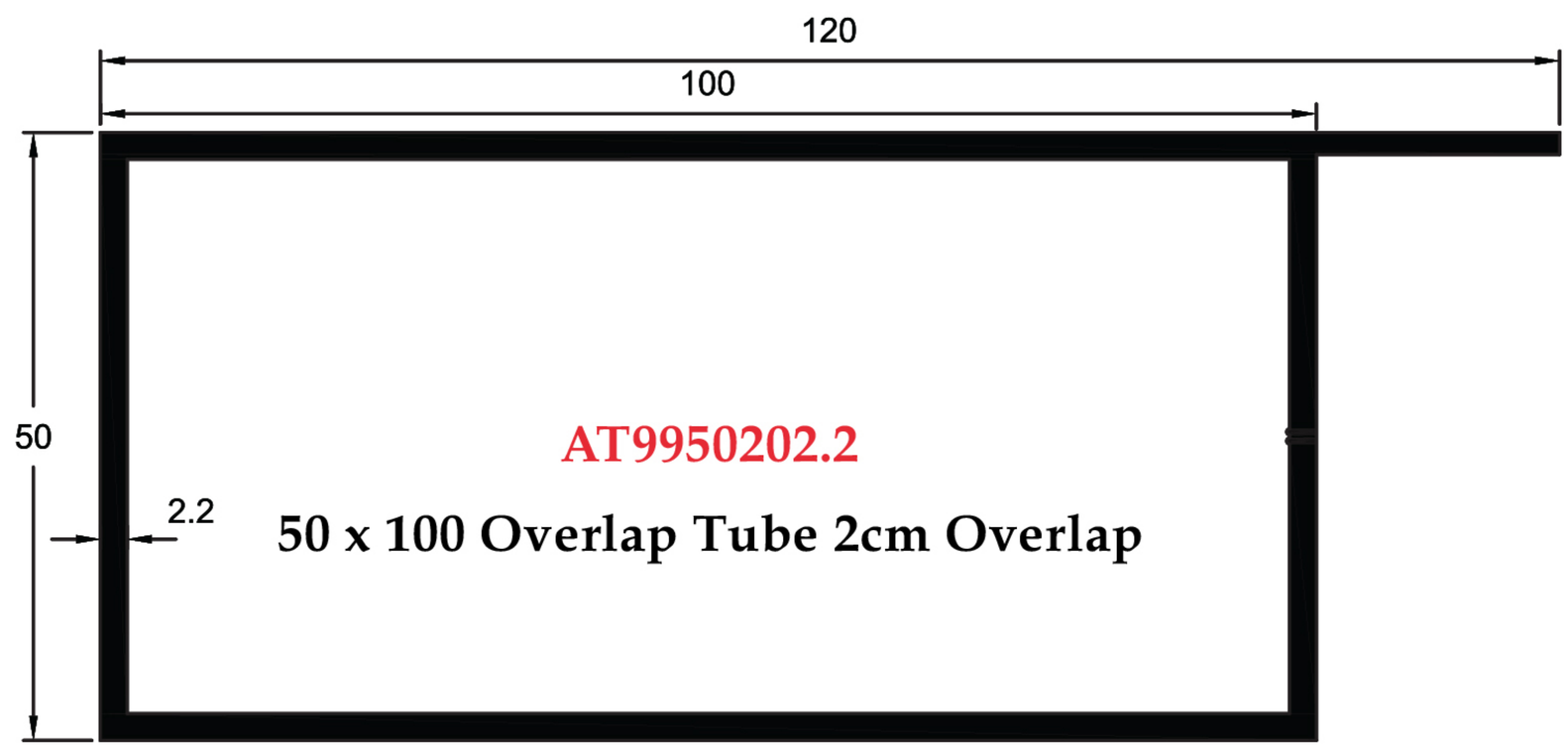

AT9950202.2

50 x 100 Overlap Tube 2cm Overlap

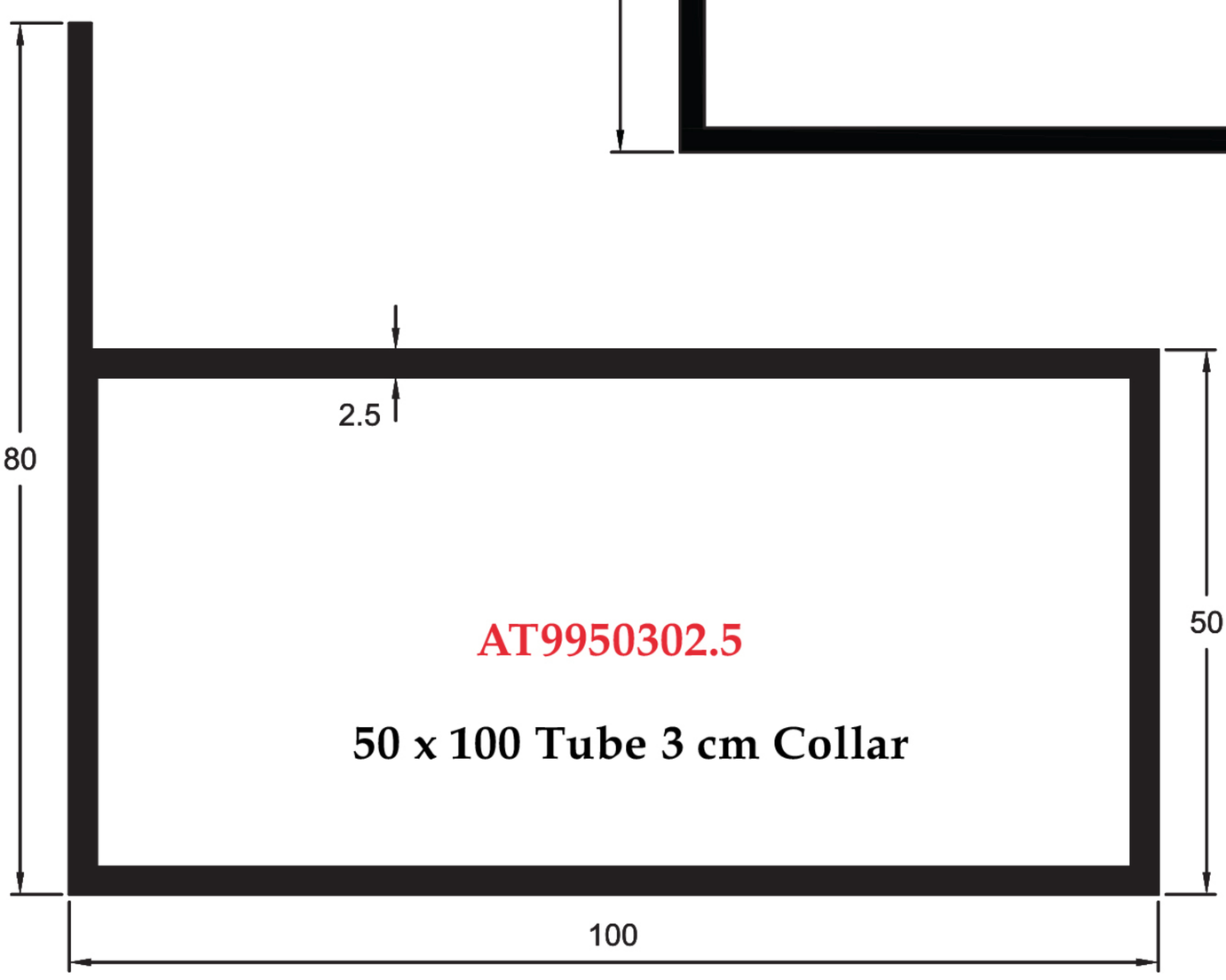

AT9950302.5

50 x 100 Tube 3 cm Collar

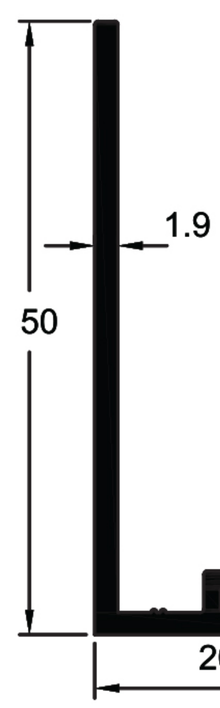

AN50201.9BR

50 x 20 Angle With Brush

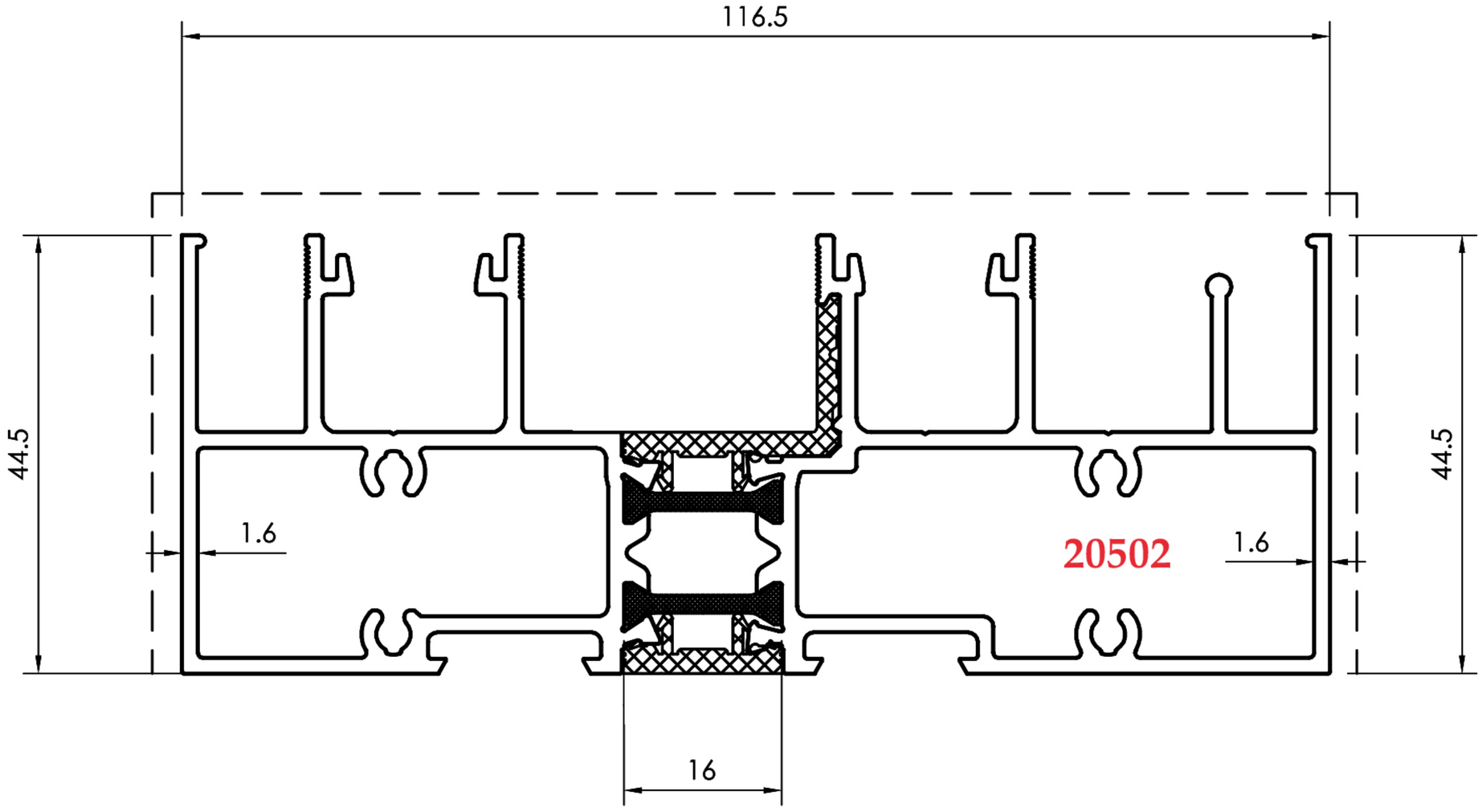
116.5
44.5
44.5
1.6
1.6
20502
16

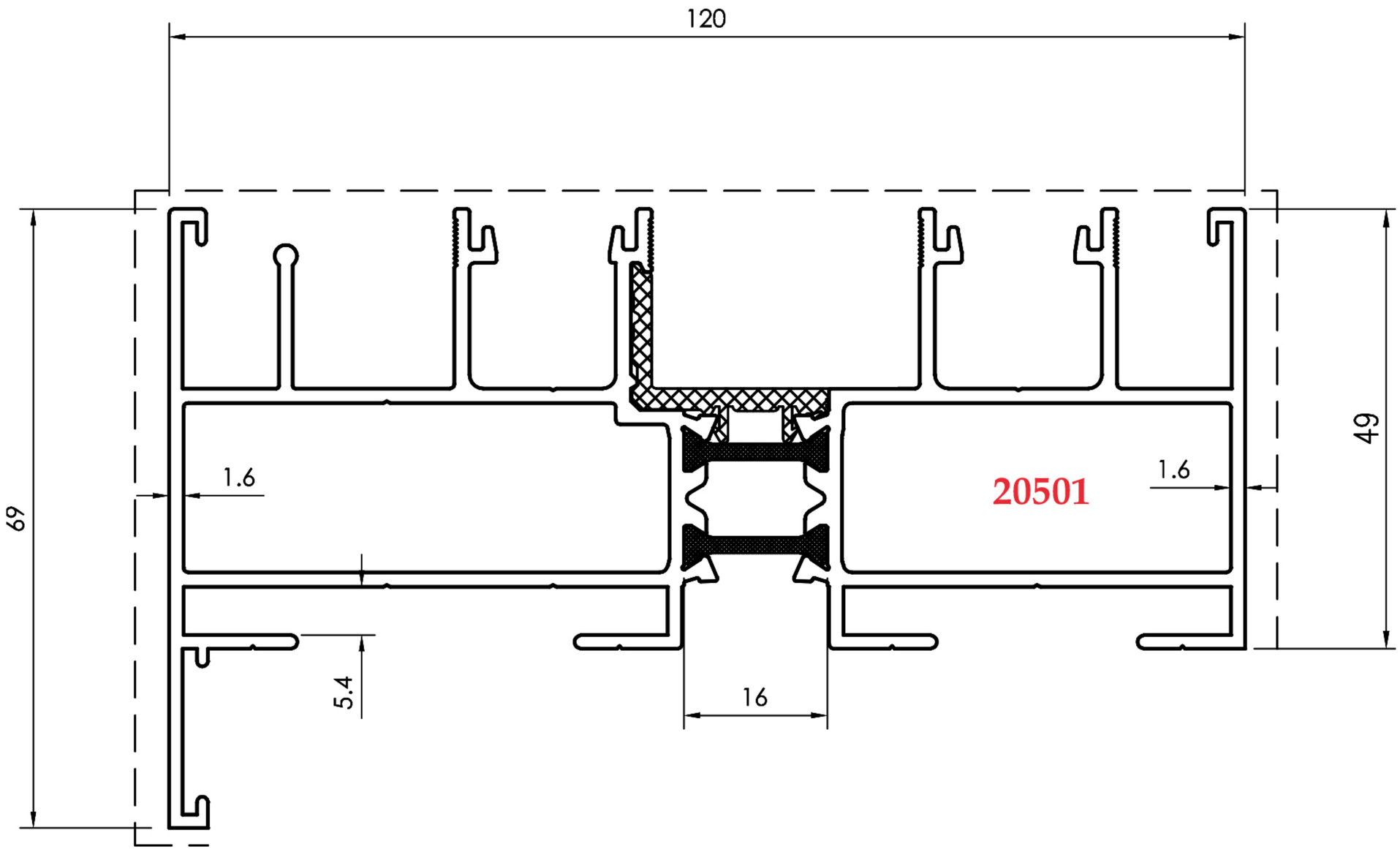
120
69
49
1.6
1.6
20501
5.4
16

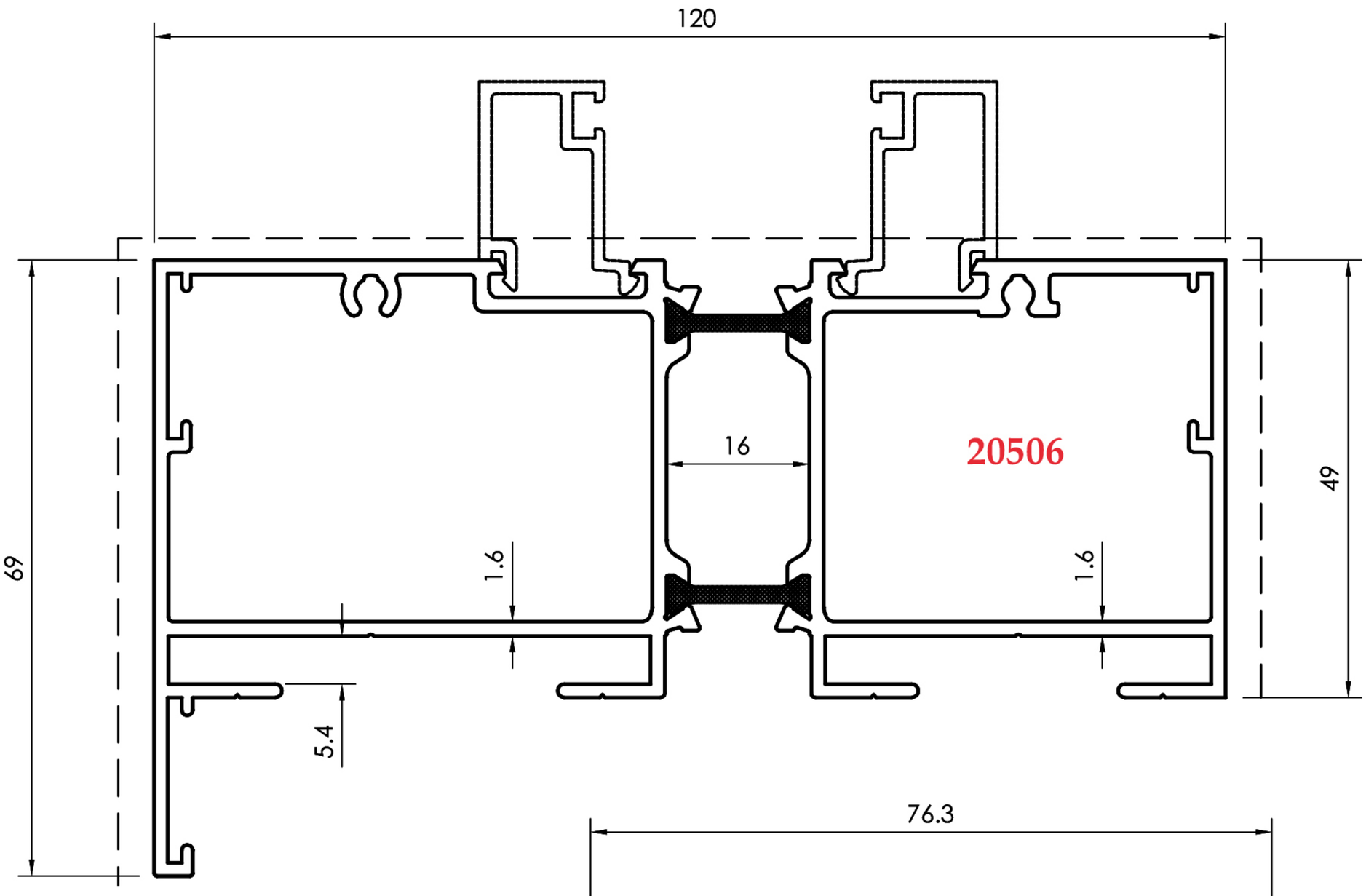

20506

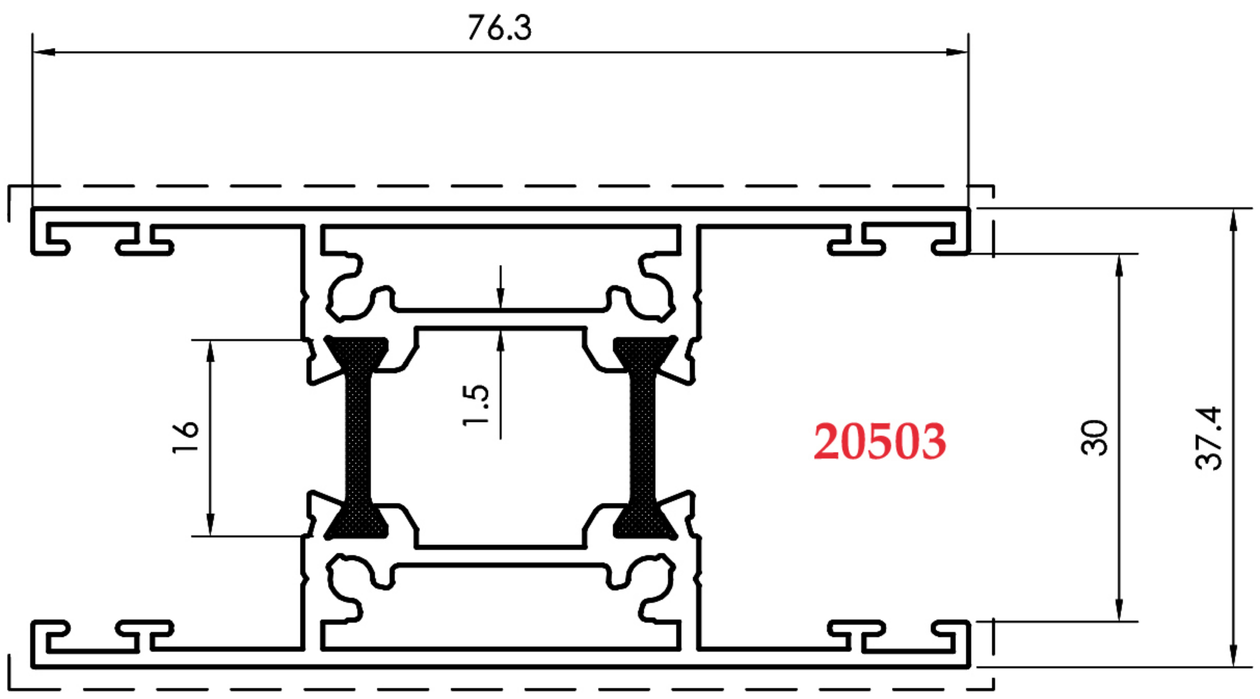

20503

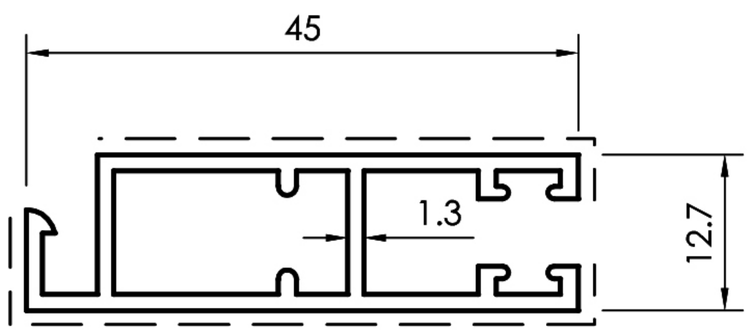

13711

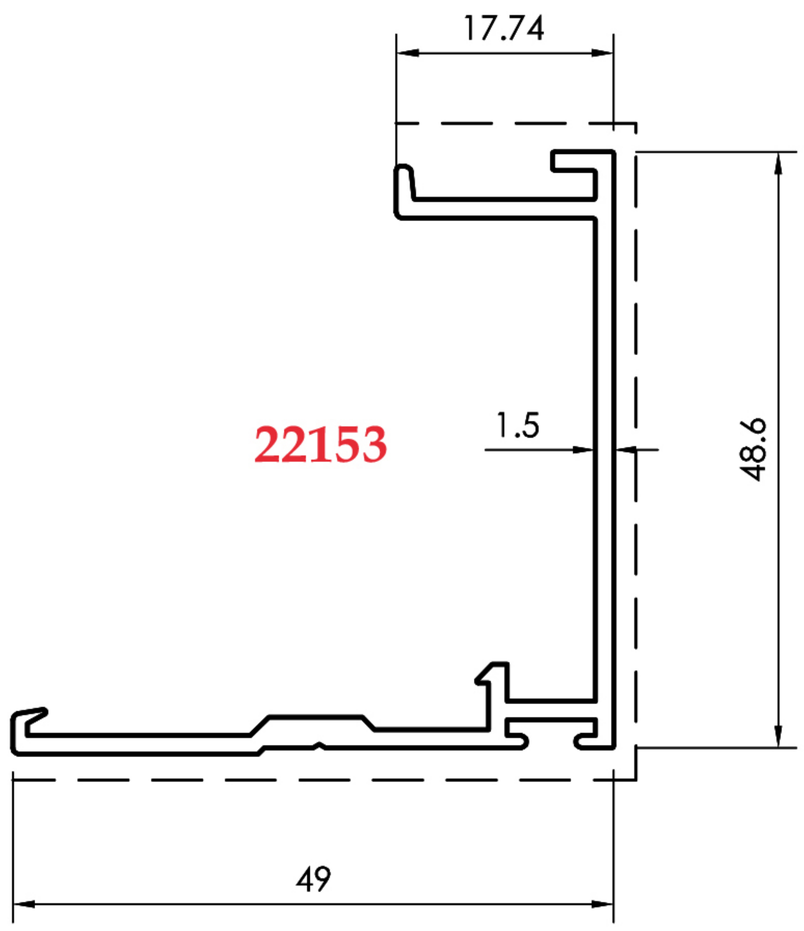

22153

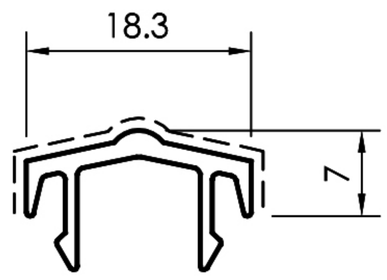

22159

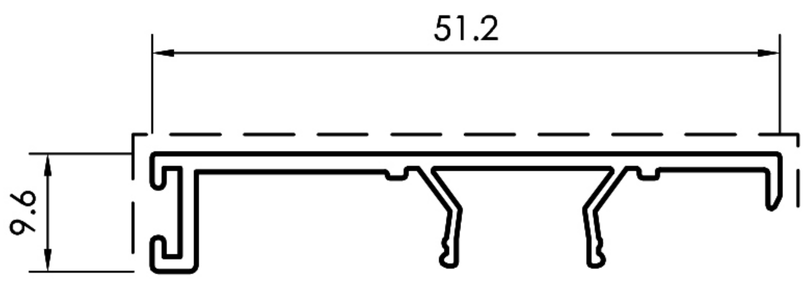

22194

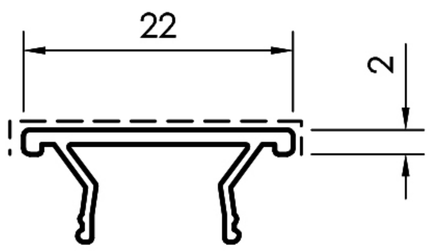

22193

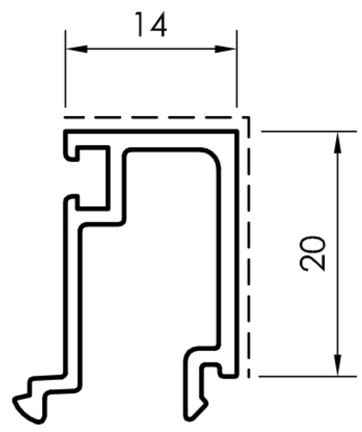

22154

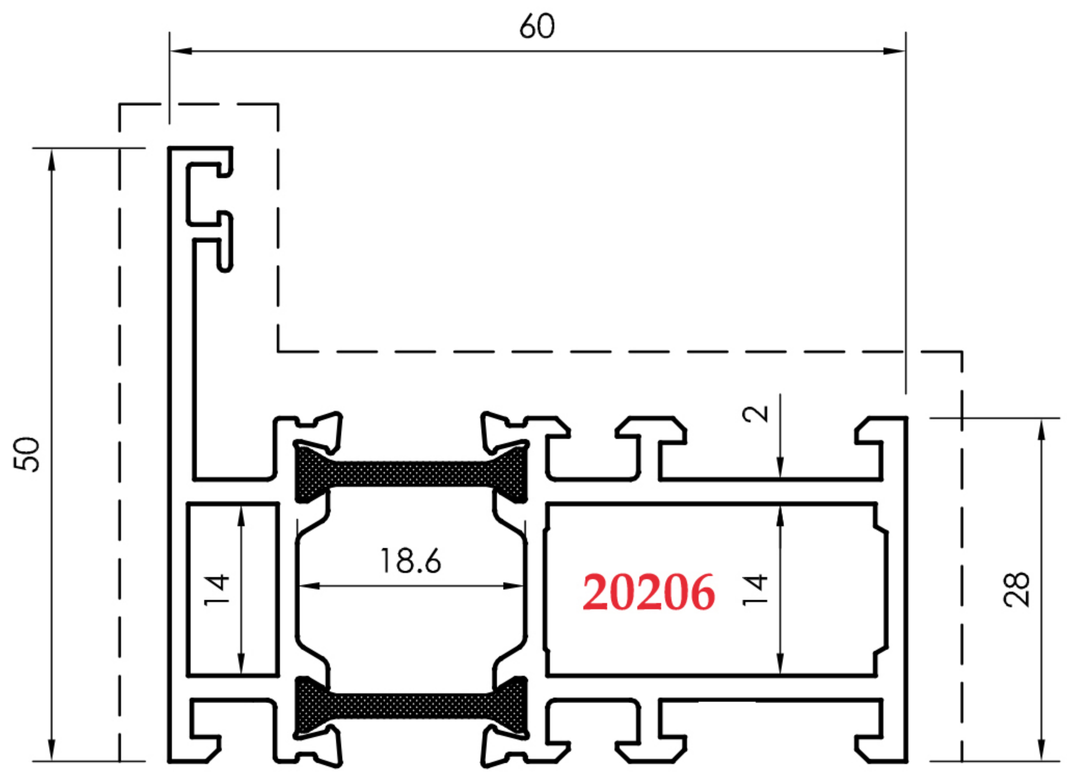
60
50
2
18.6
14
20206
14
28

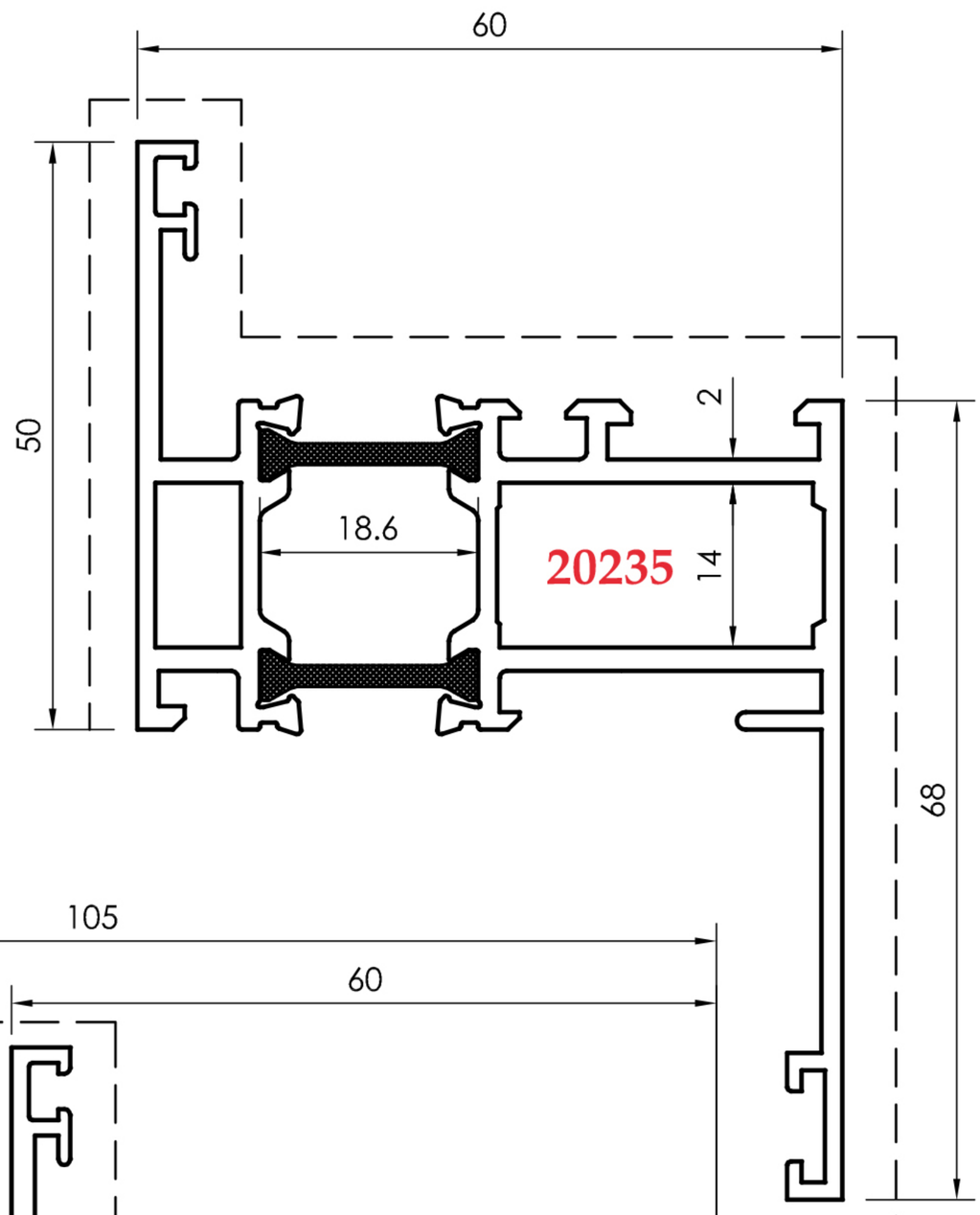
60
50
2
18.6
20235
14
68

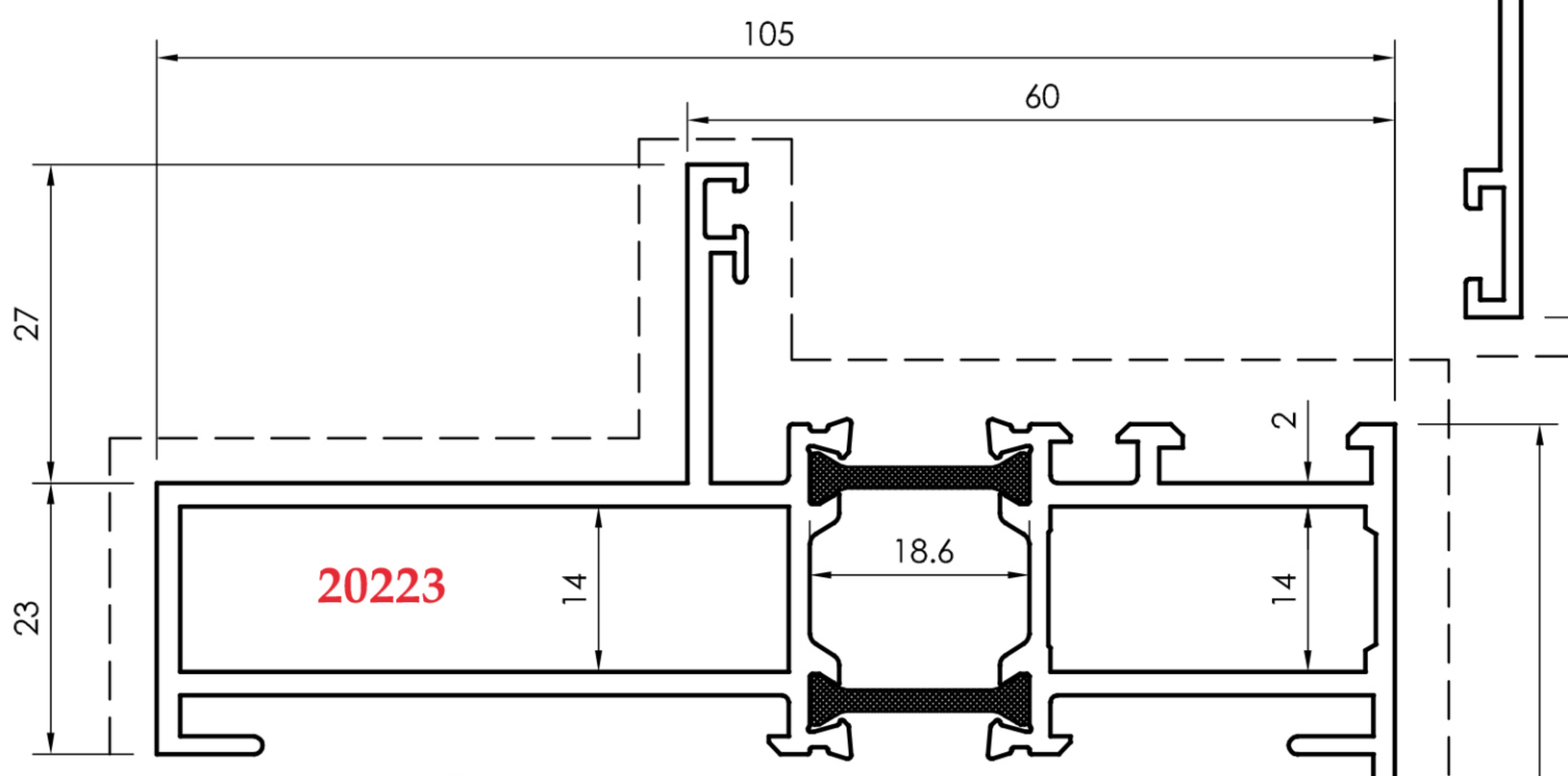
105
60
27
23
20223
14
18.6
2
14
68

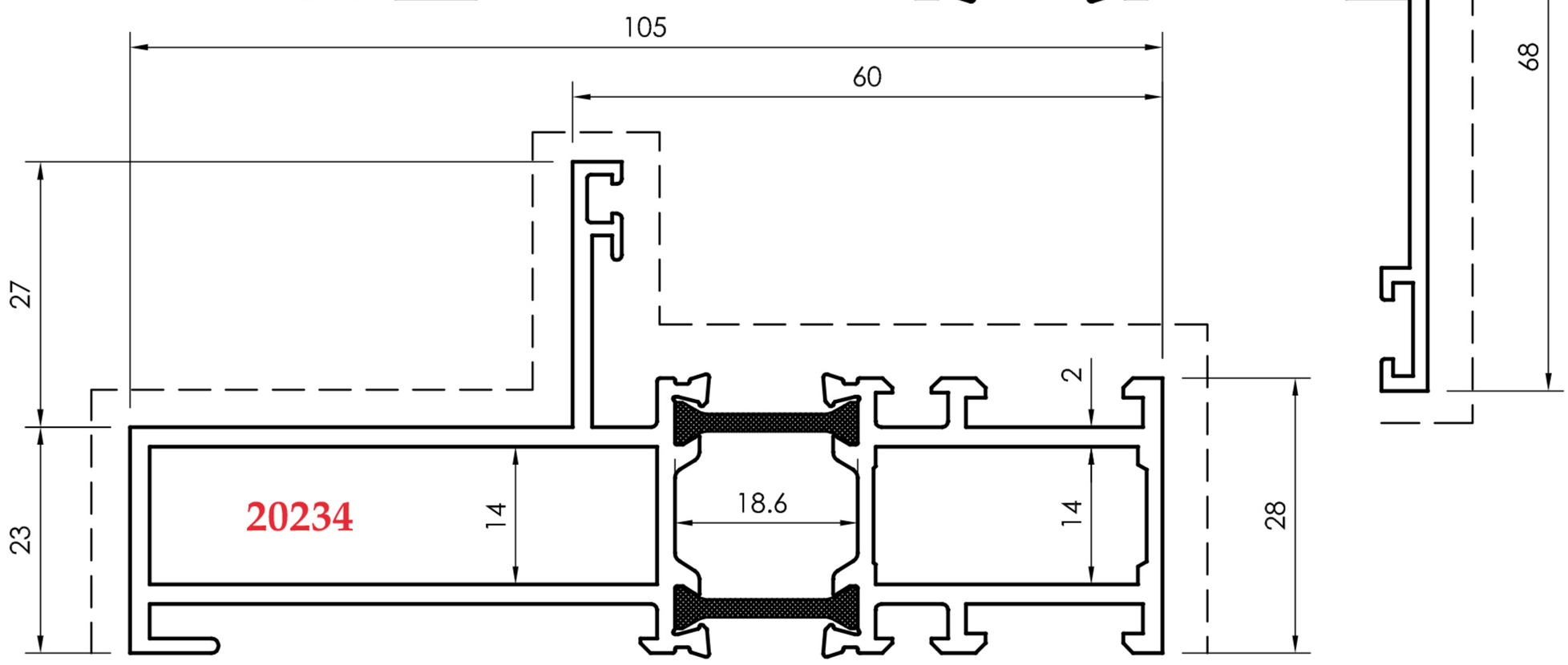
105
60
27
23
20234
14
18.6
2
14
28

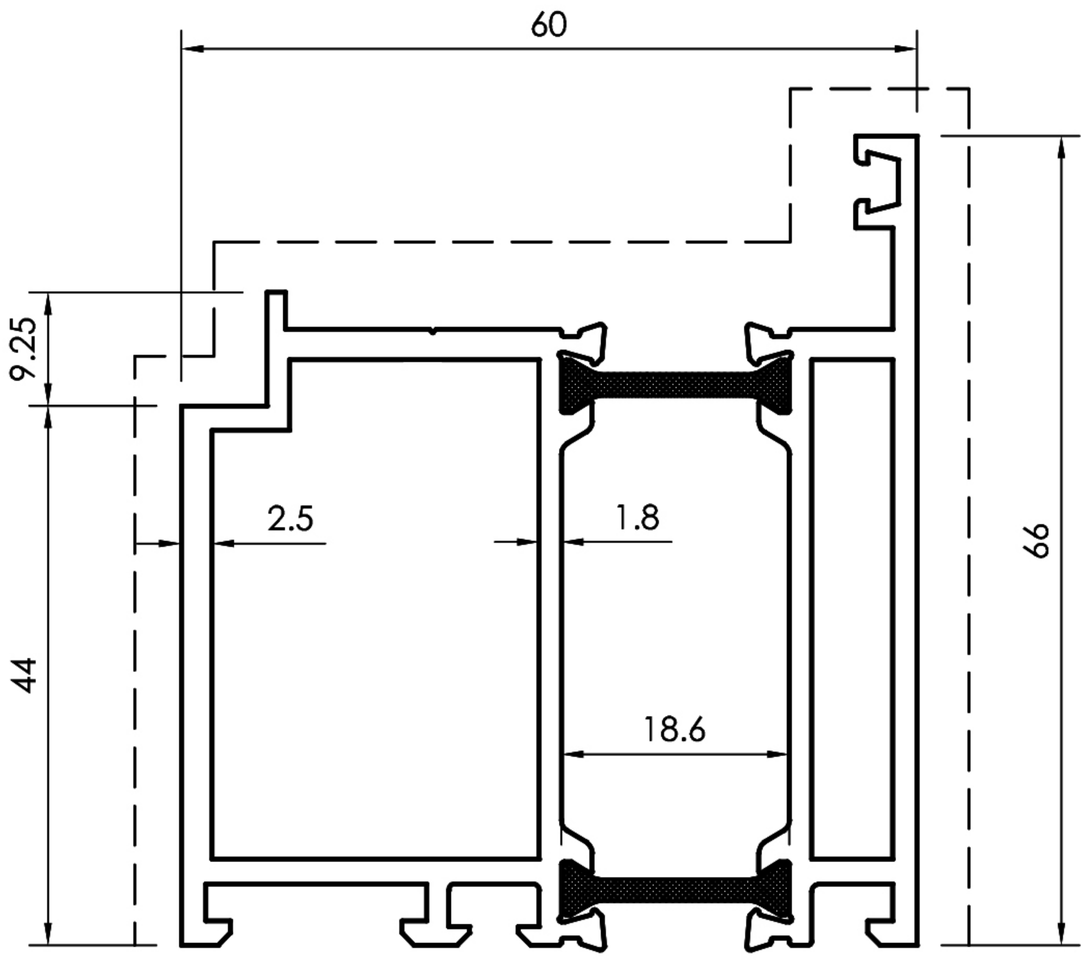

20210

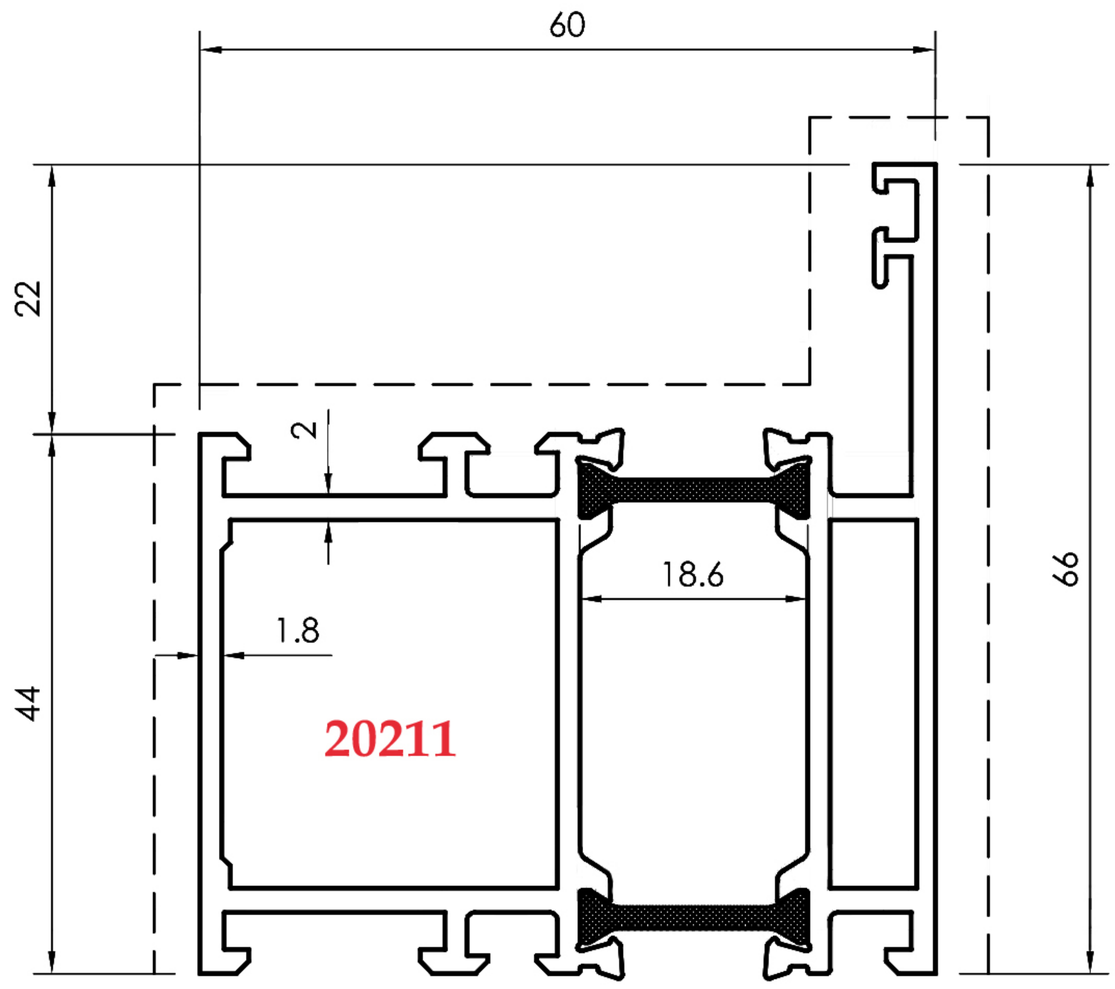

20211

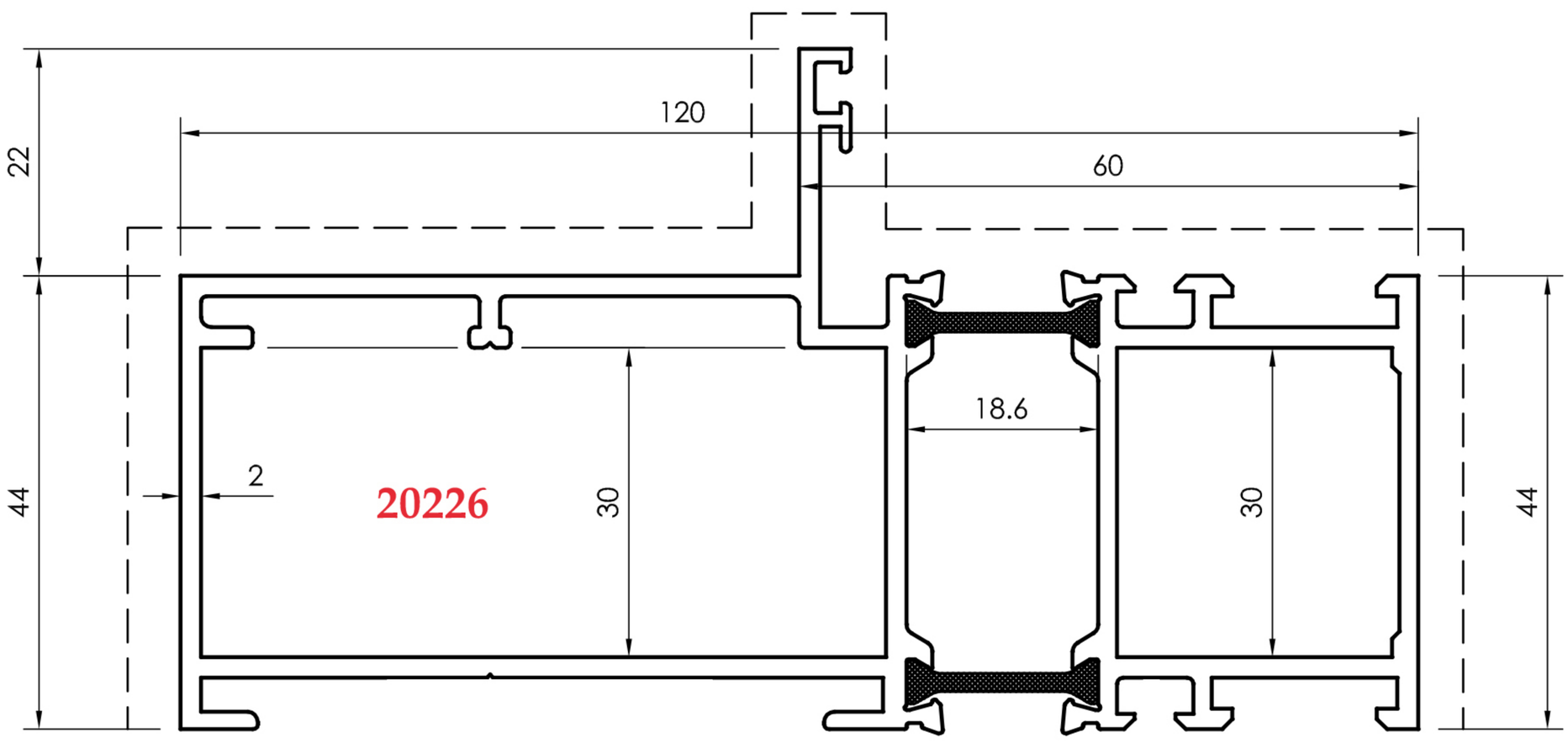

20226

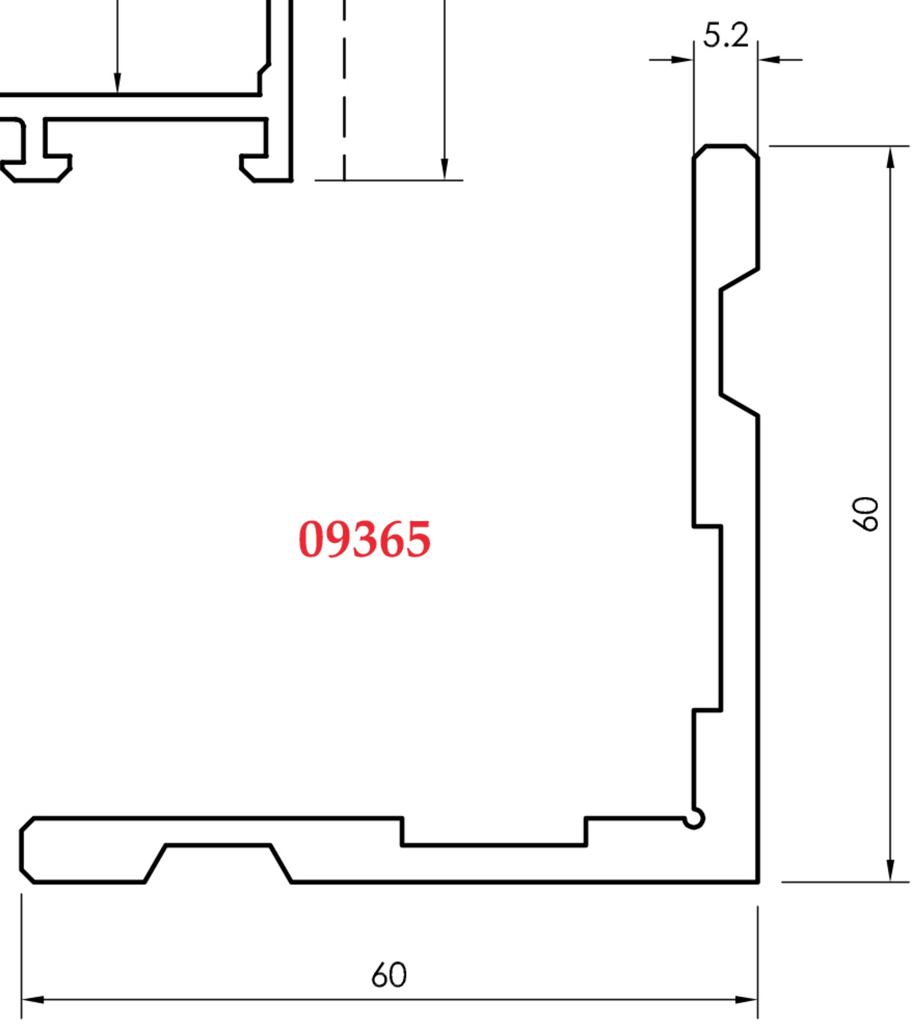

09365

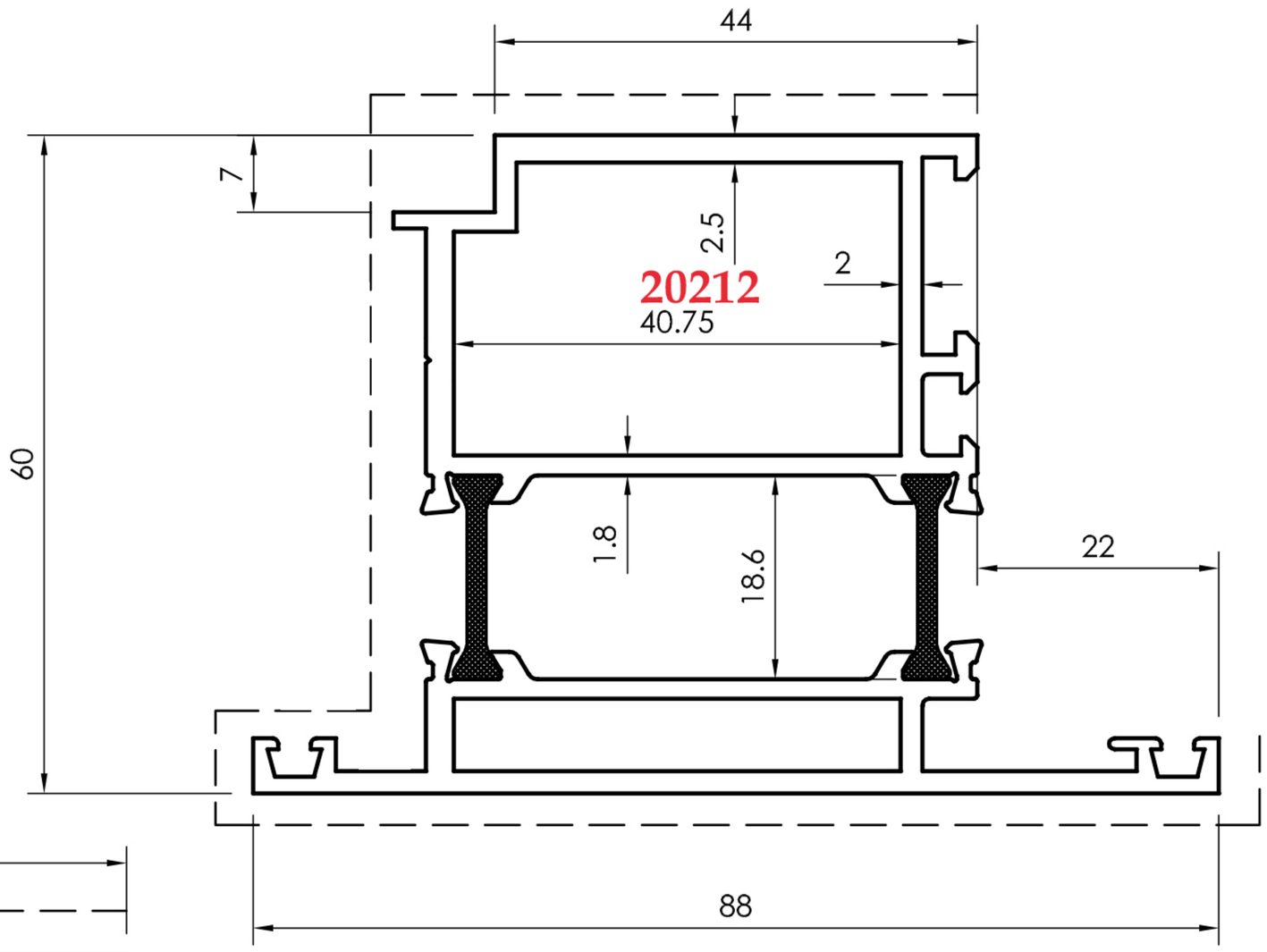
44
7
2.5
2
20212
40.75
60
1.8
18.6
22
88

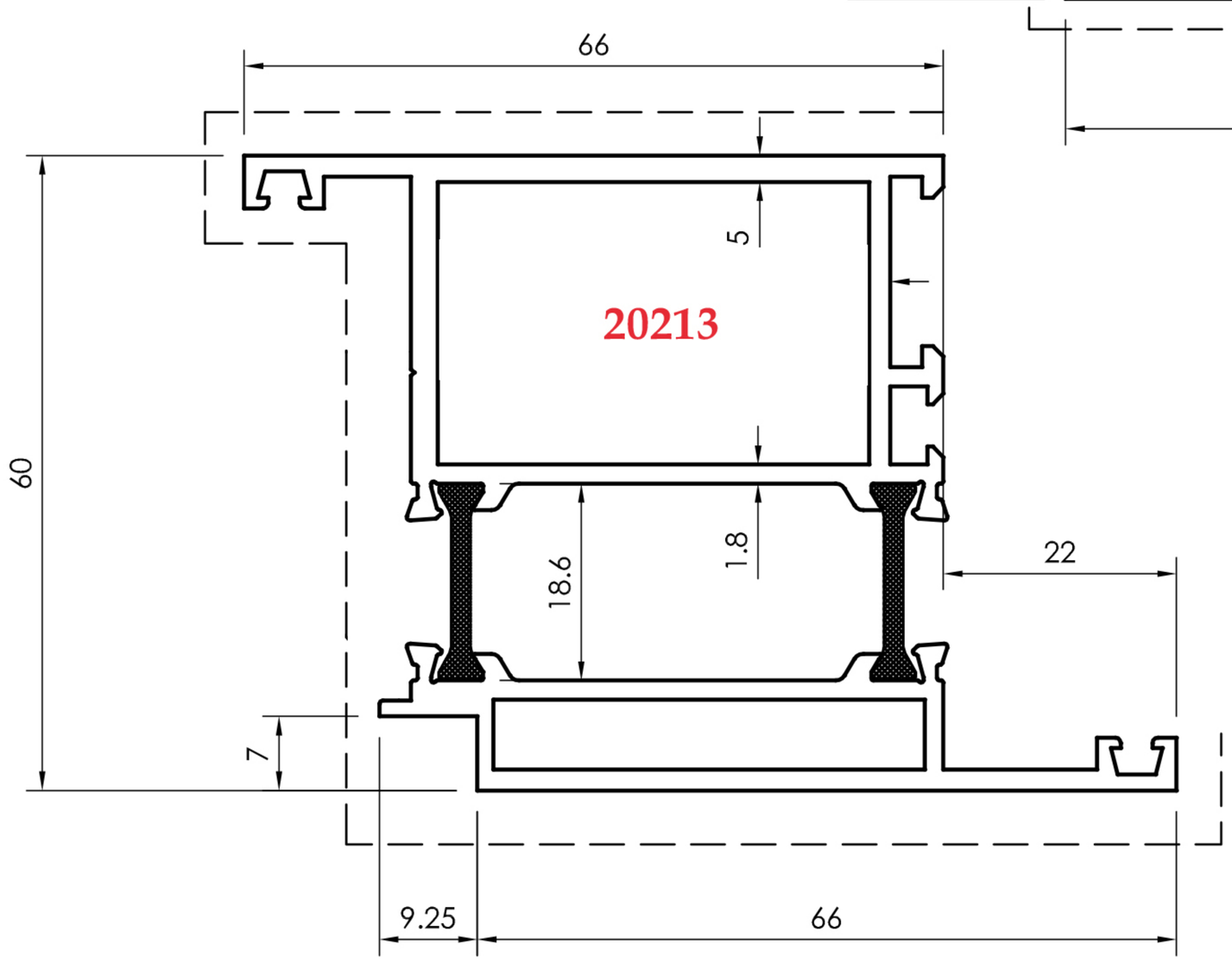
66
5
20213
60
18.6
1.8
22
7
9.25
66

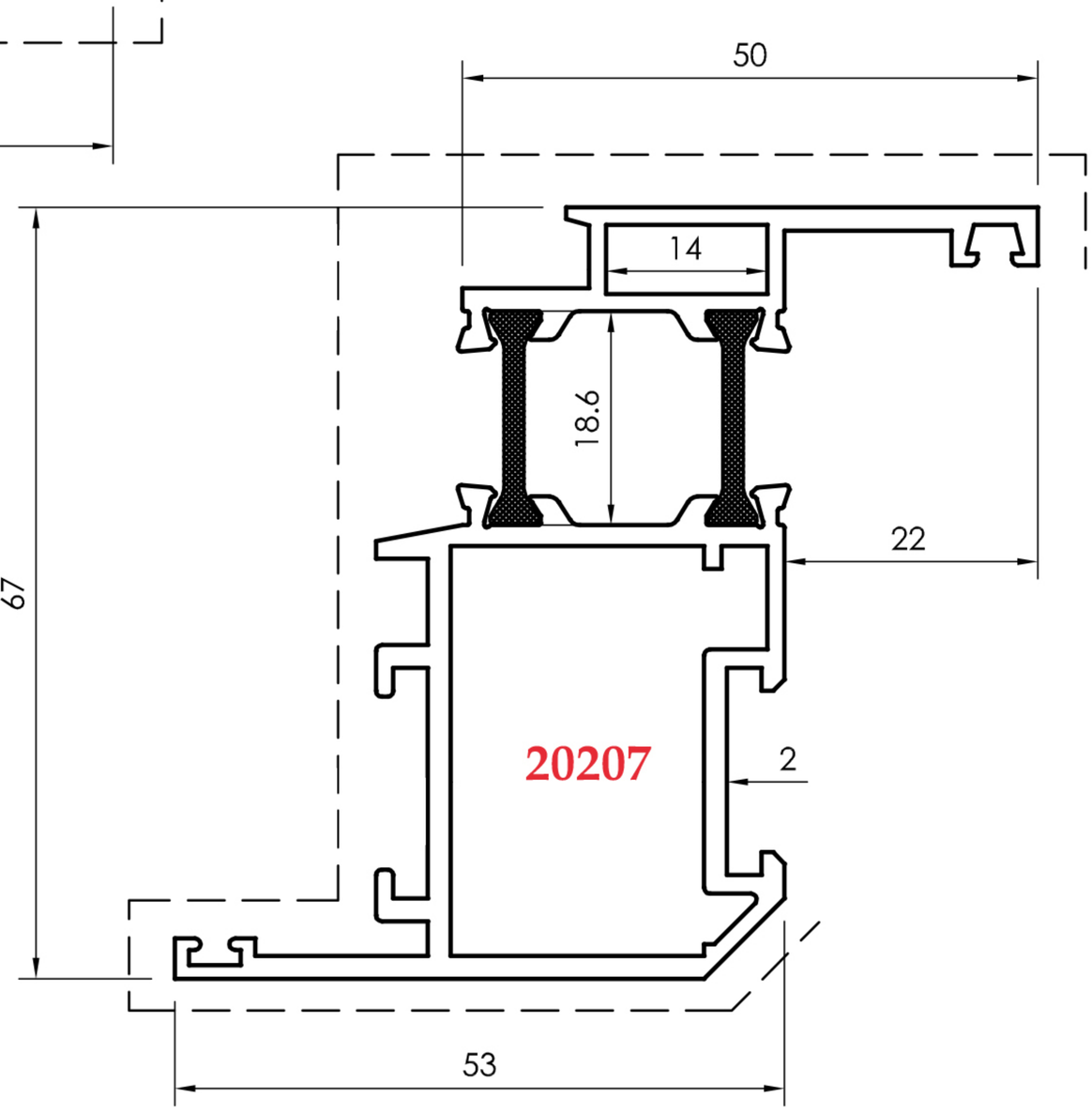
50
14
18.6
22
67
20207
2
53

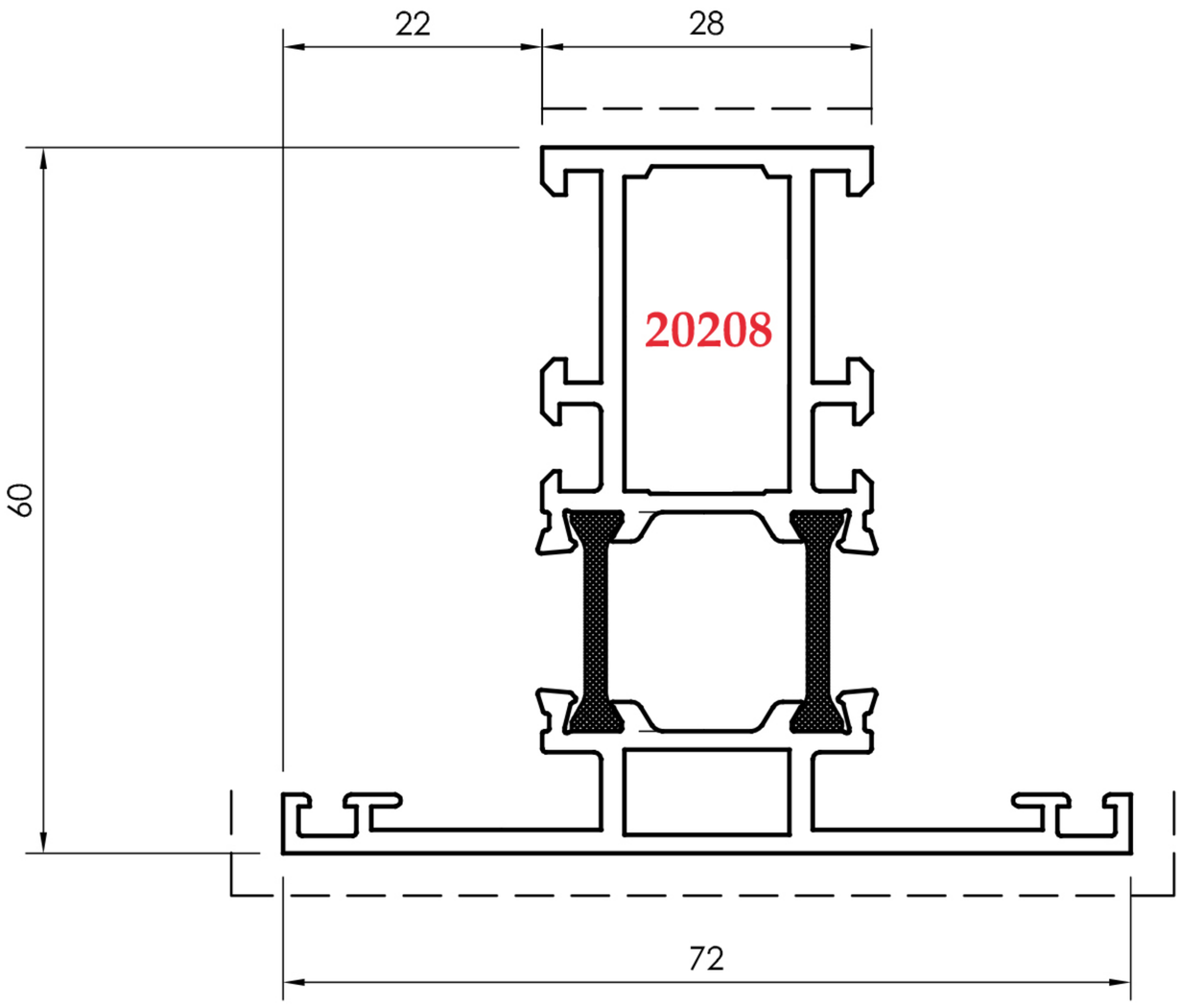
22
28
60
20208
72

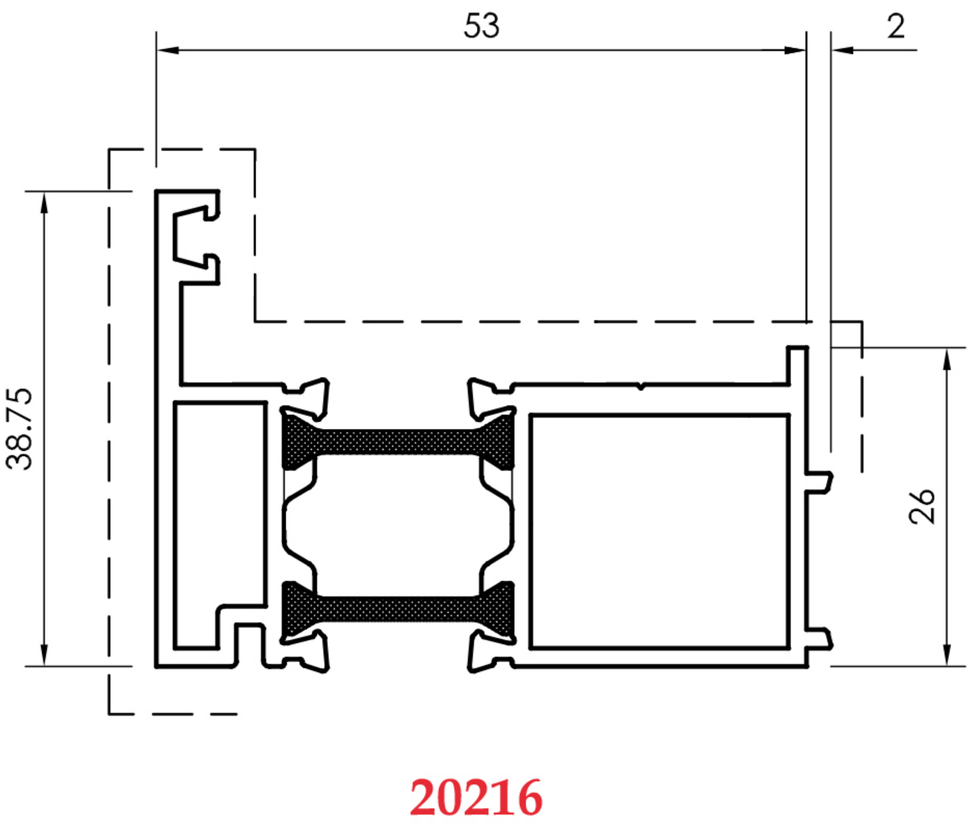
53
2
38.75
26
20216

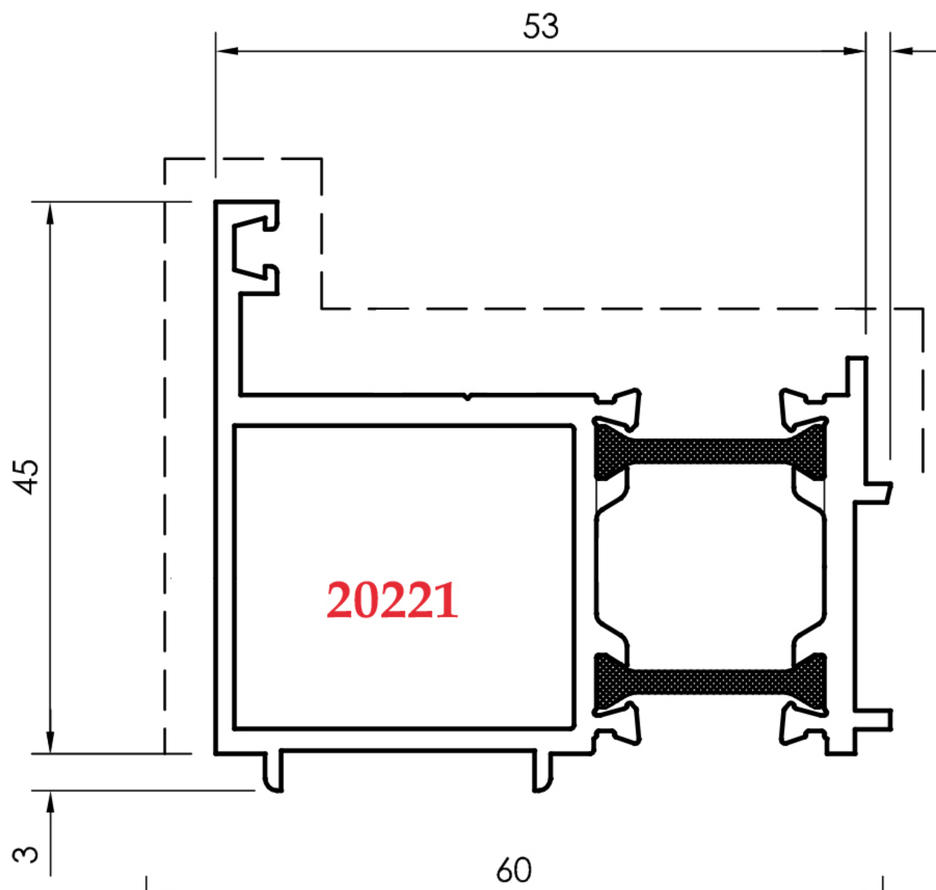
53
2
45
20221
3

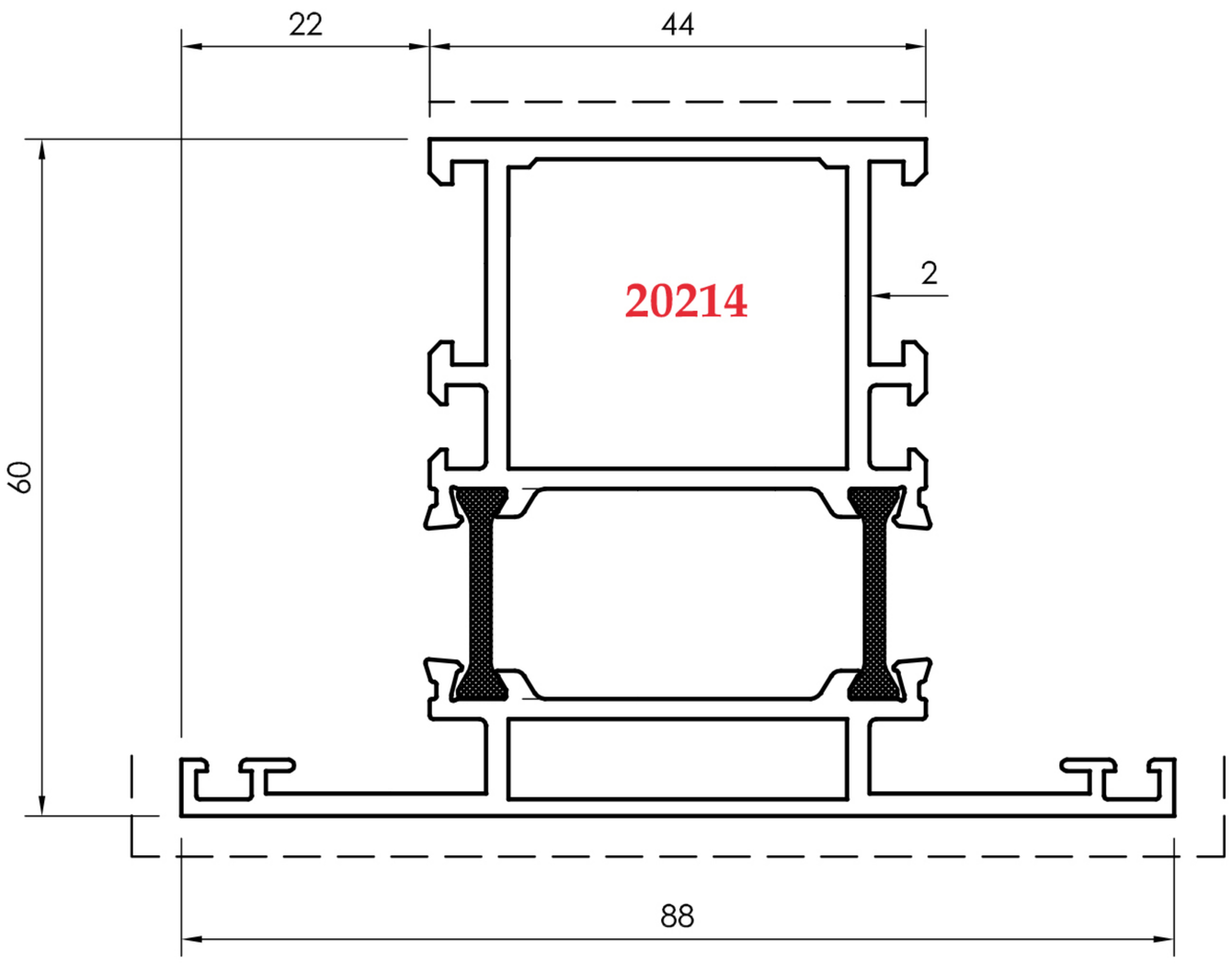
22
44
20214
2
60
88

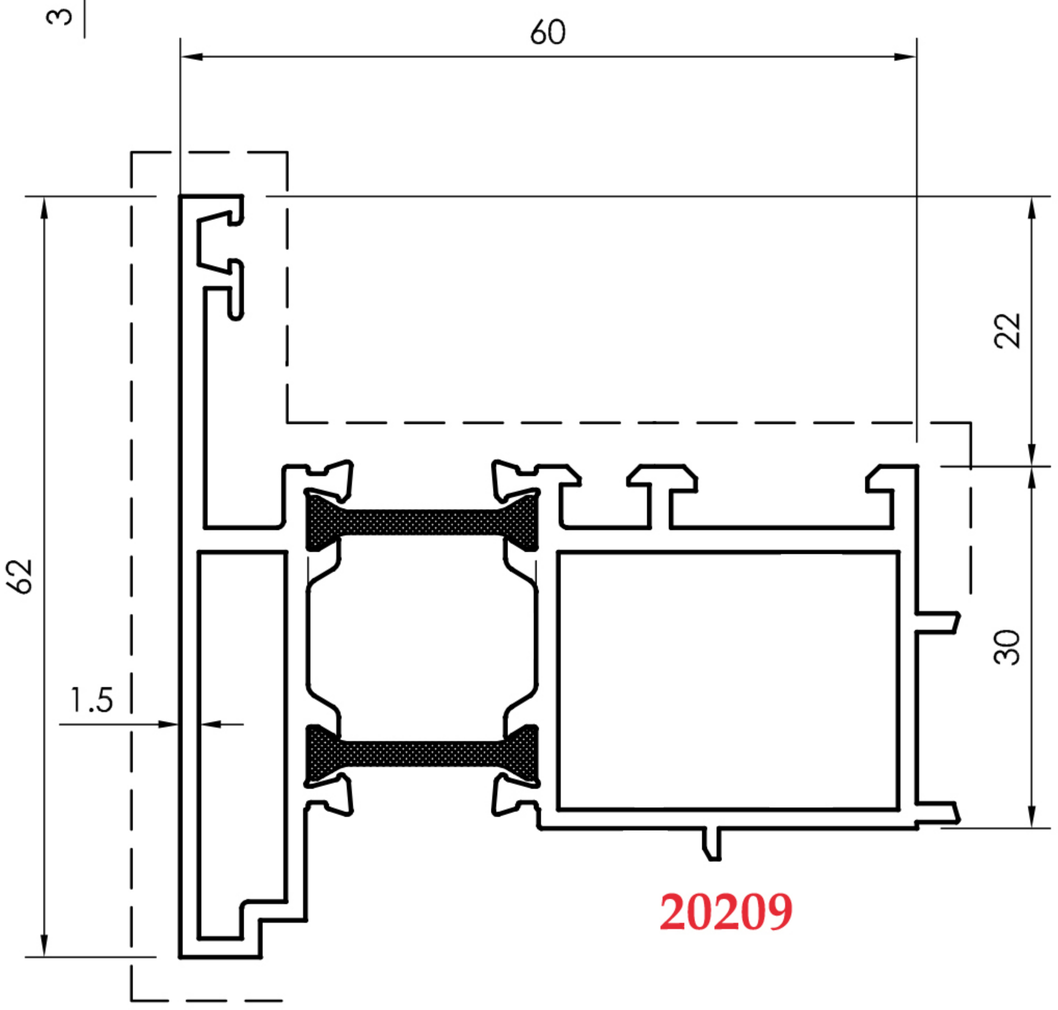
60
22
62
30
1.5
20209

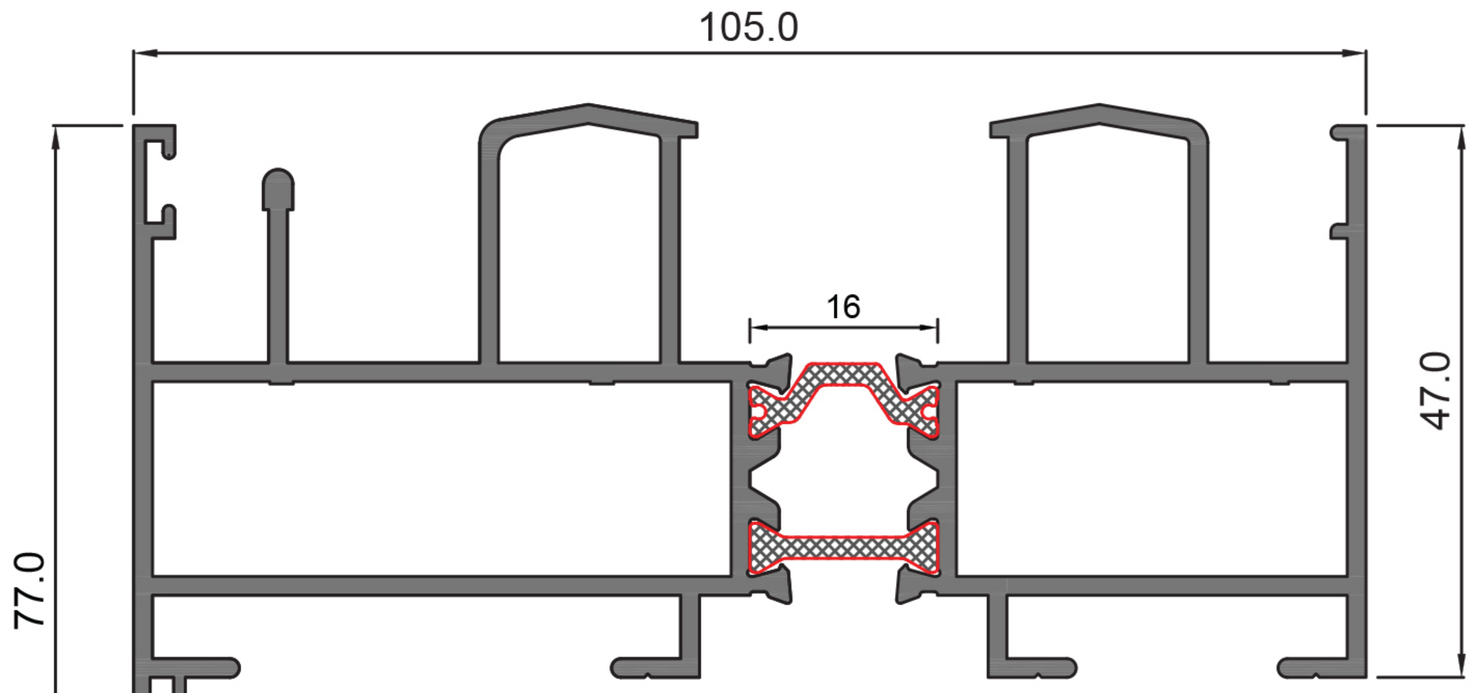

AL31001

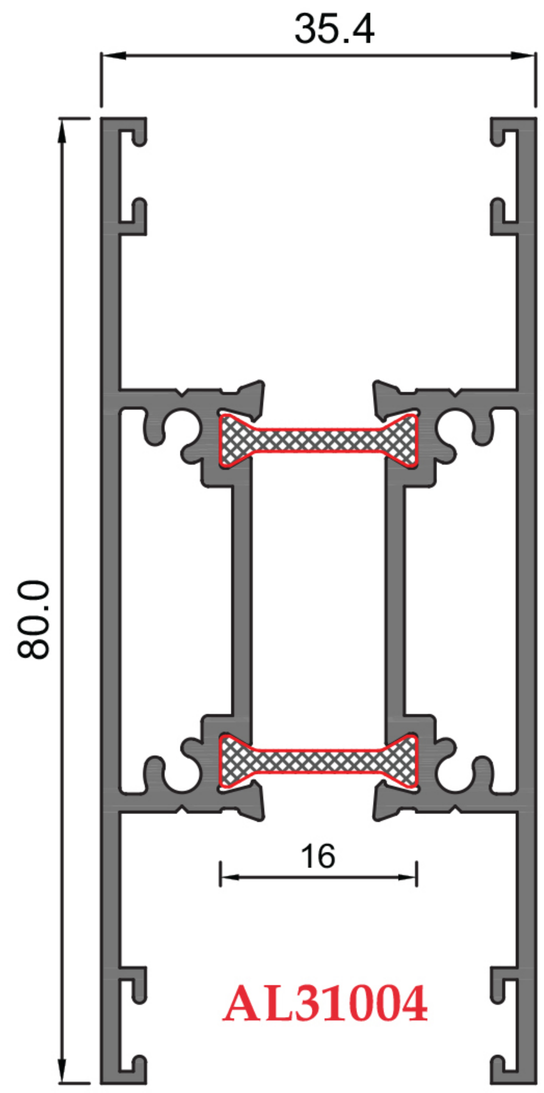

AL31004

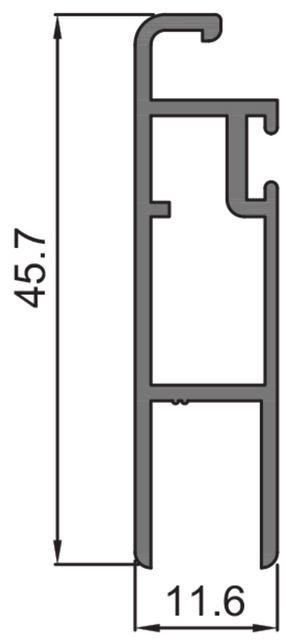

AL31007

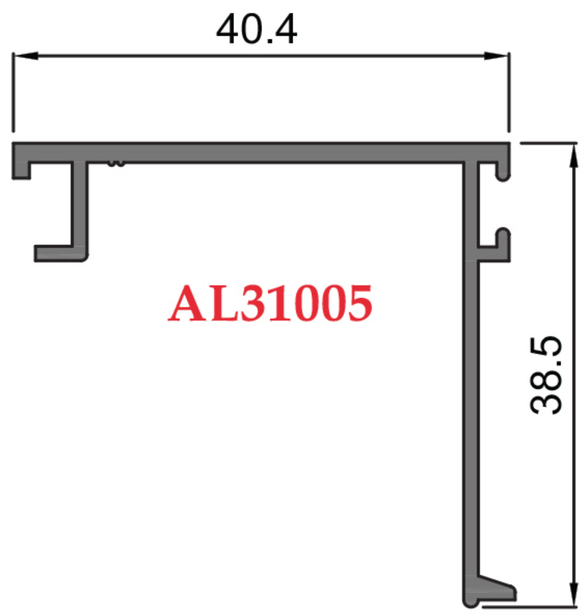

AL31005

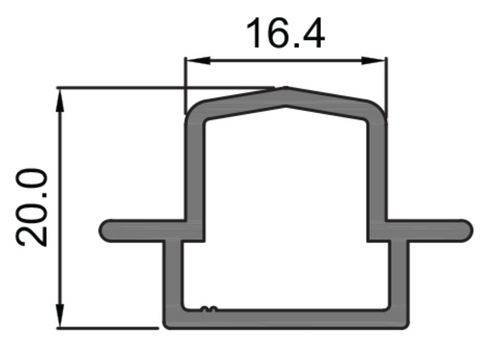

AL31014

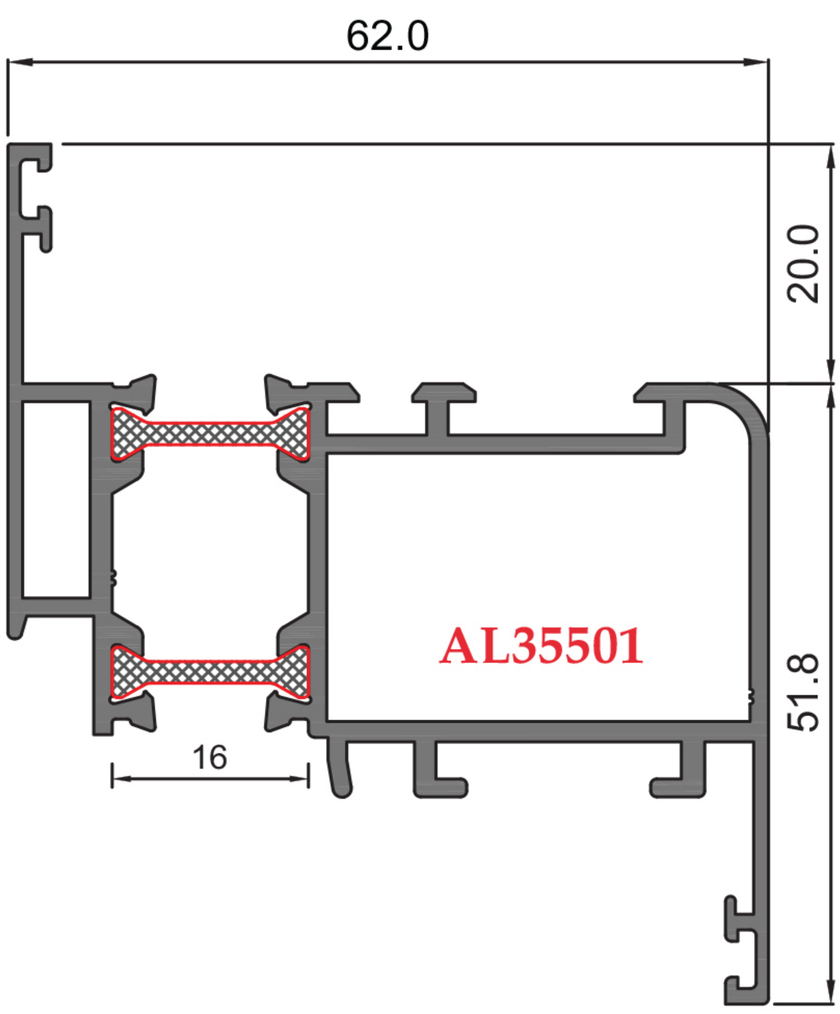

AL35501

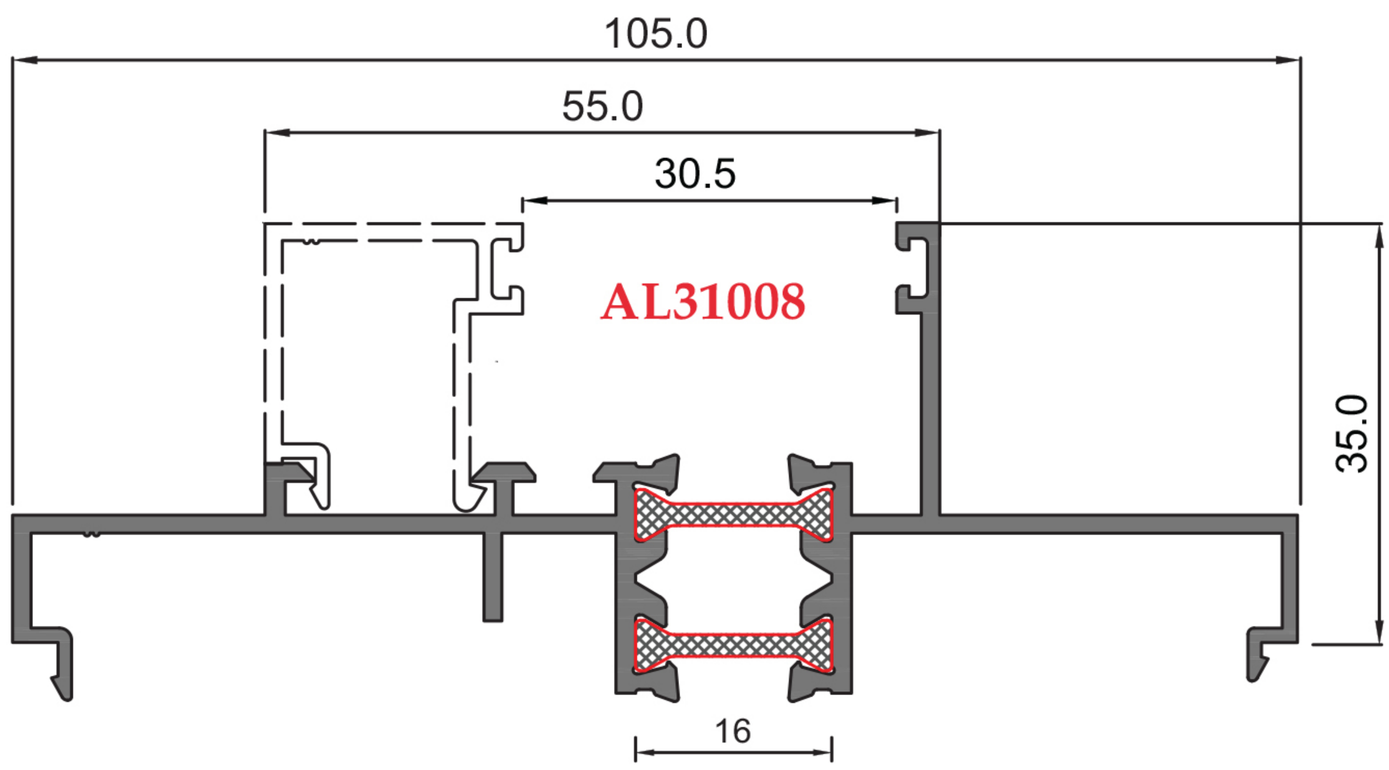

AL31008

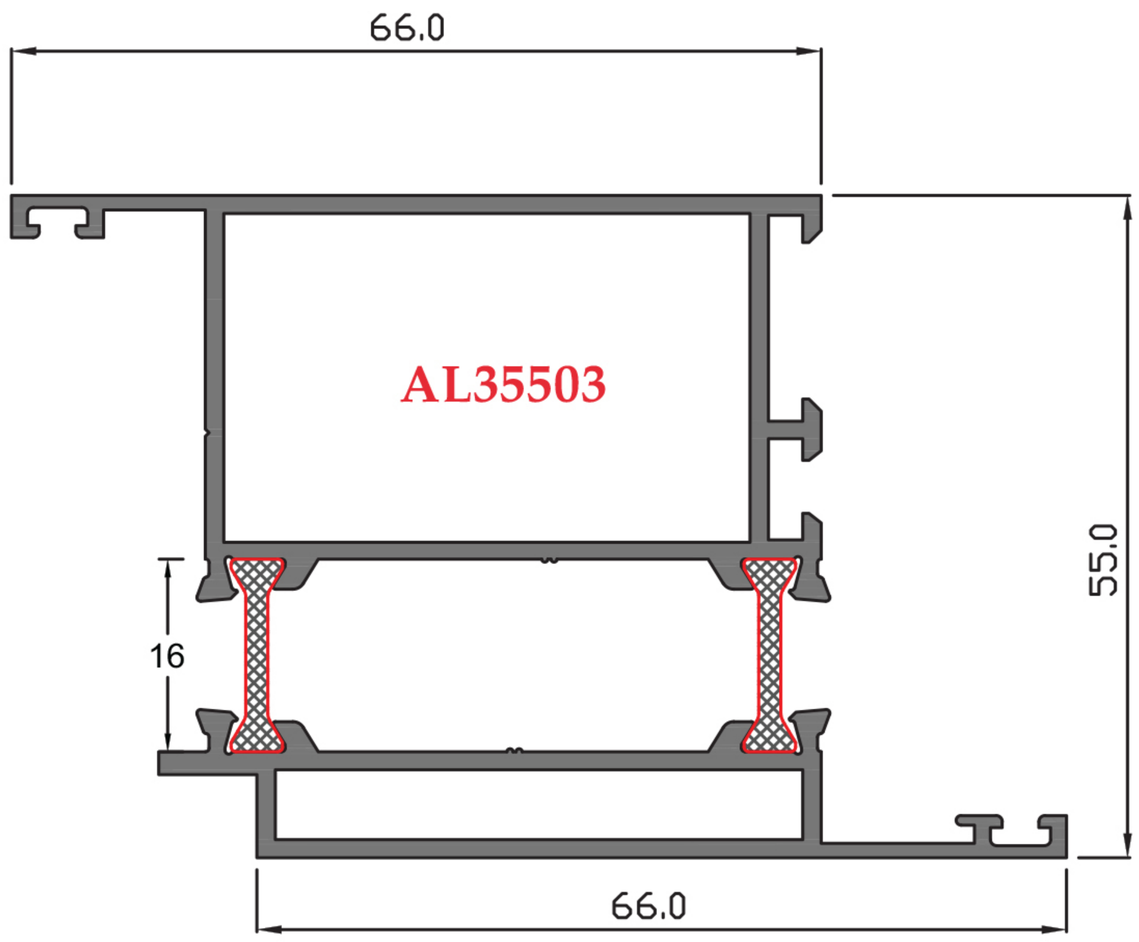

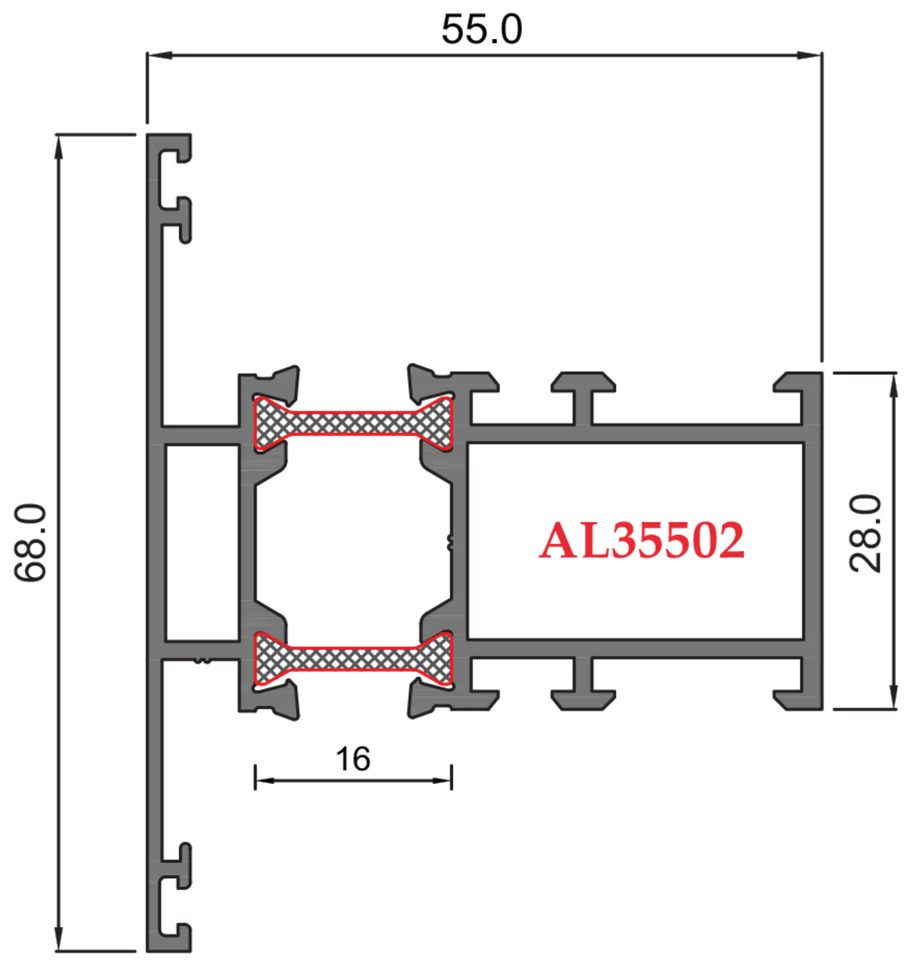

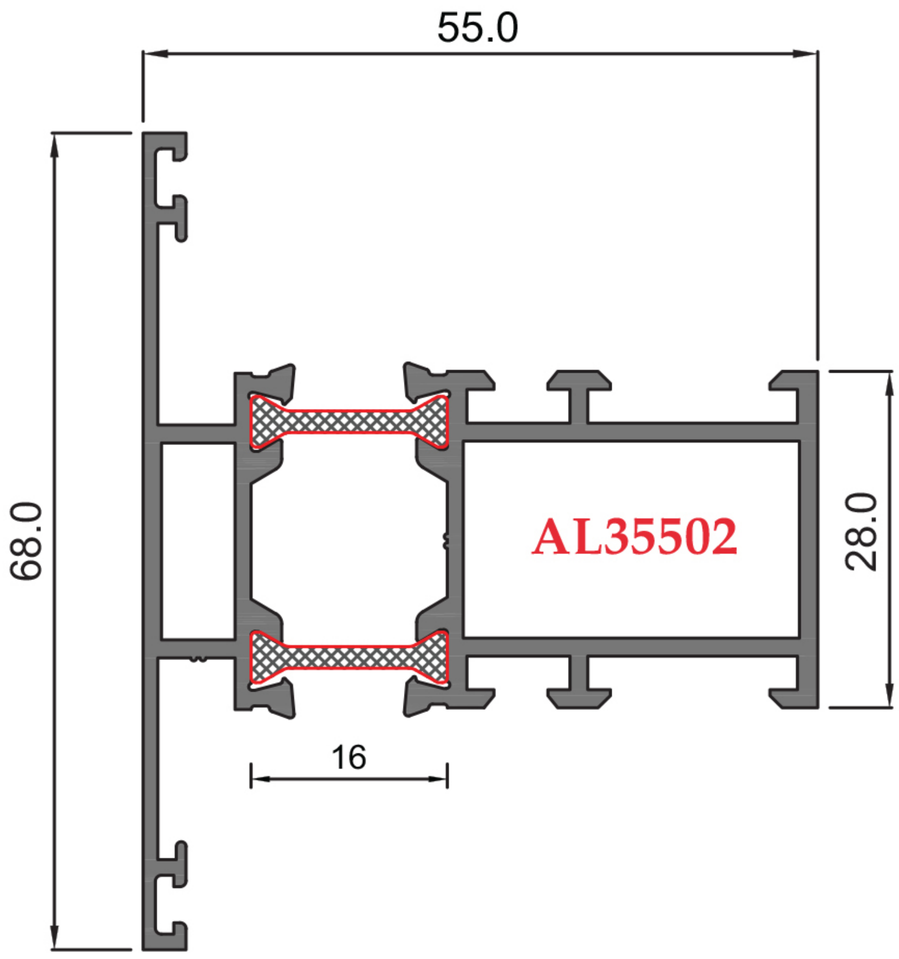

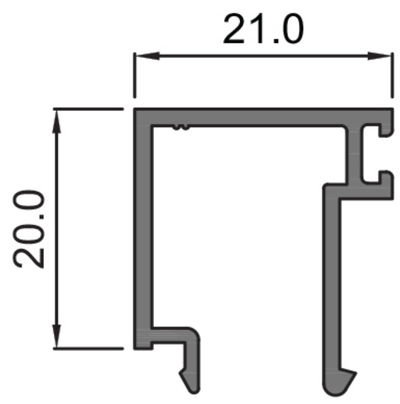

AL35523

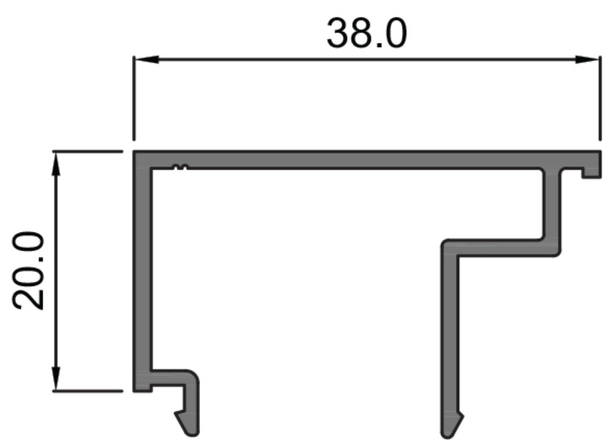

AL35522

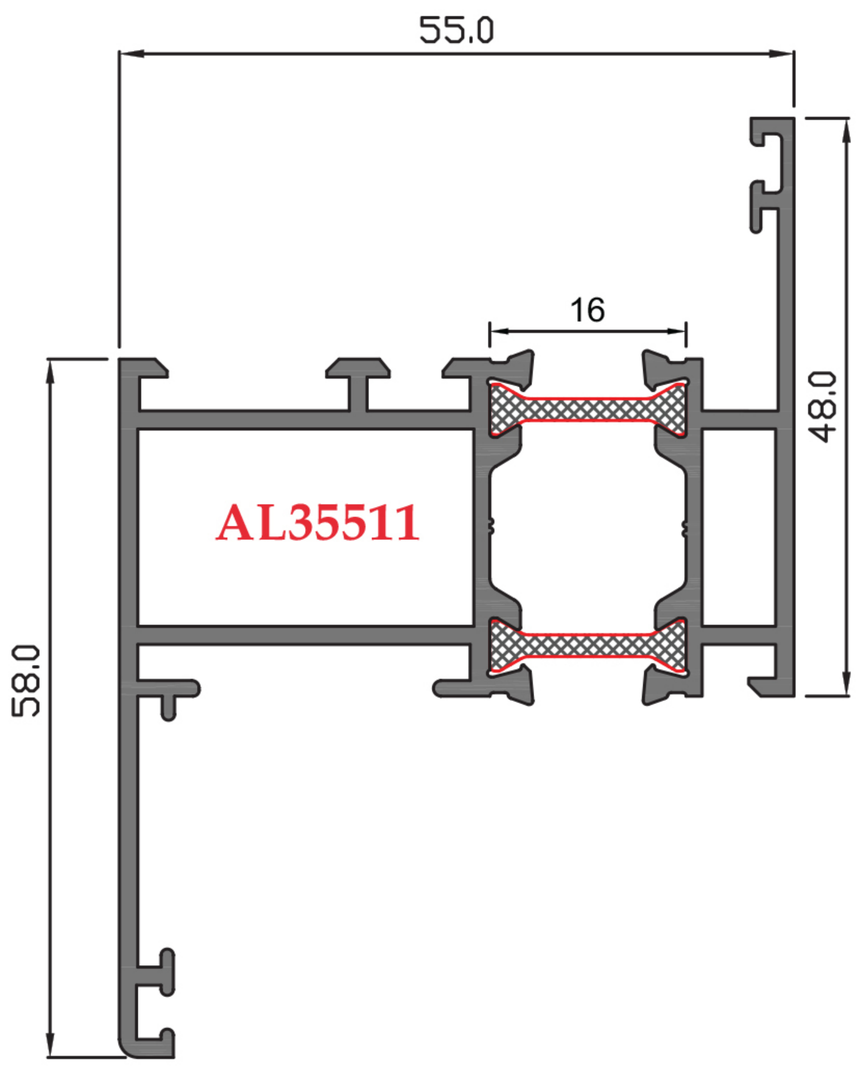

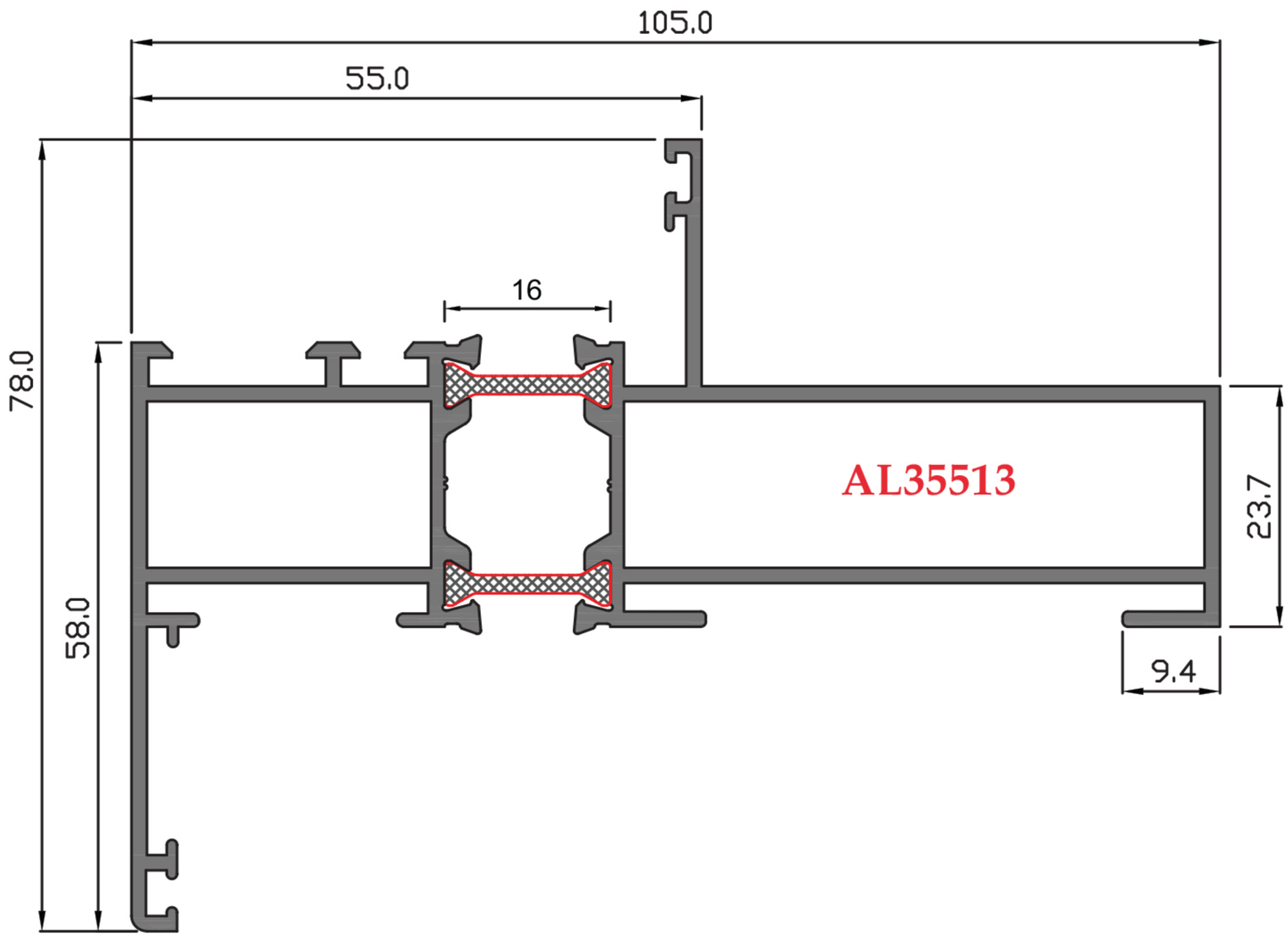

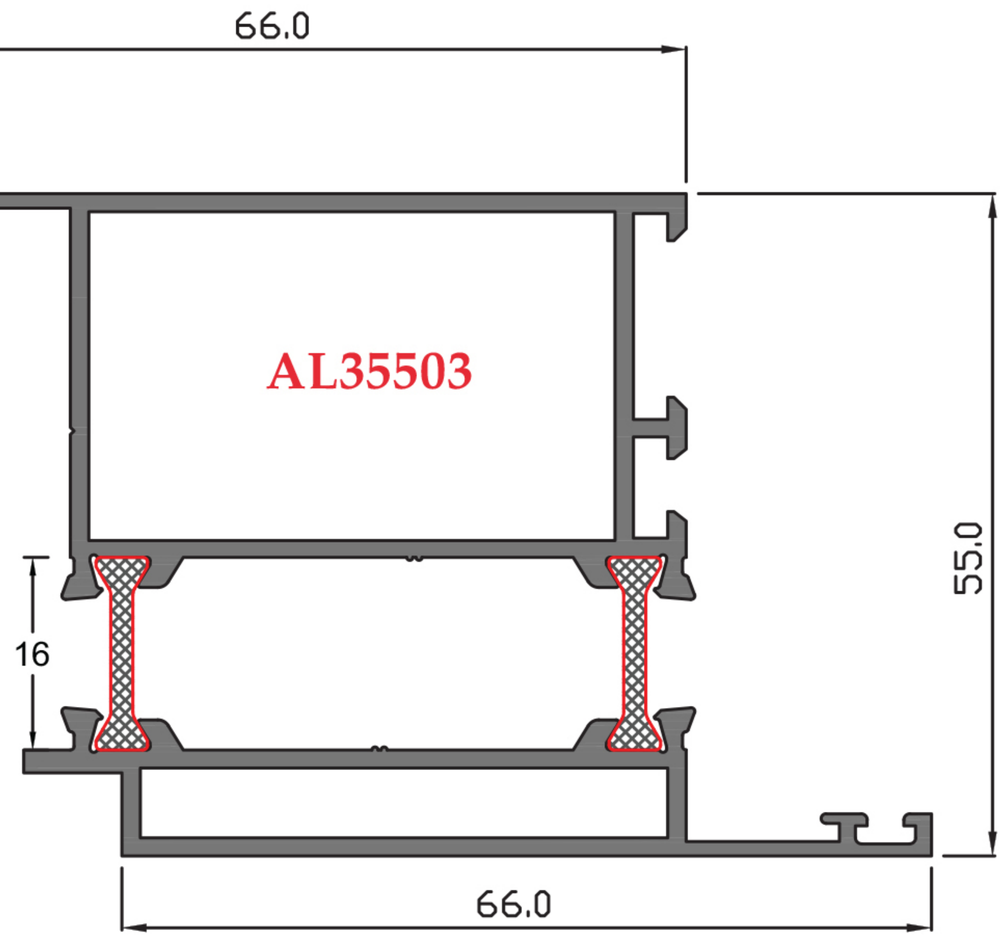
66.0
AL35503
16
55.0
66.0

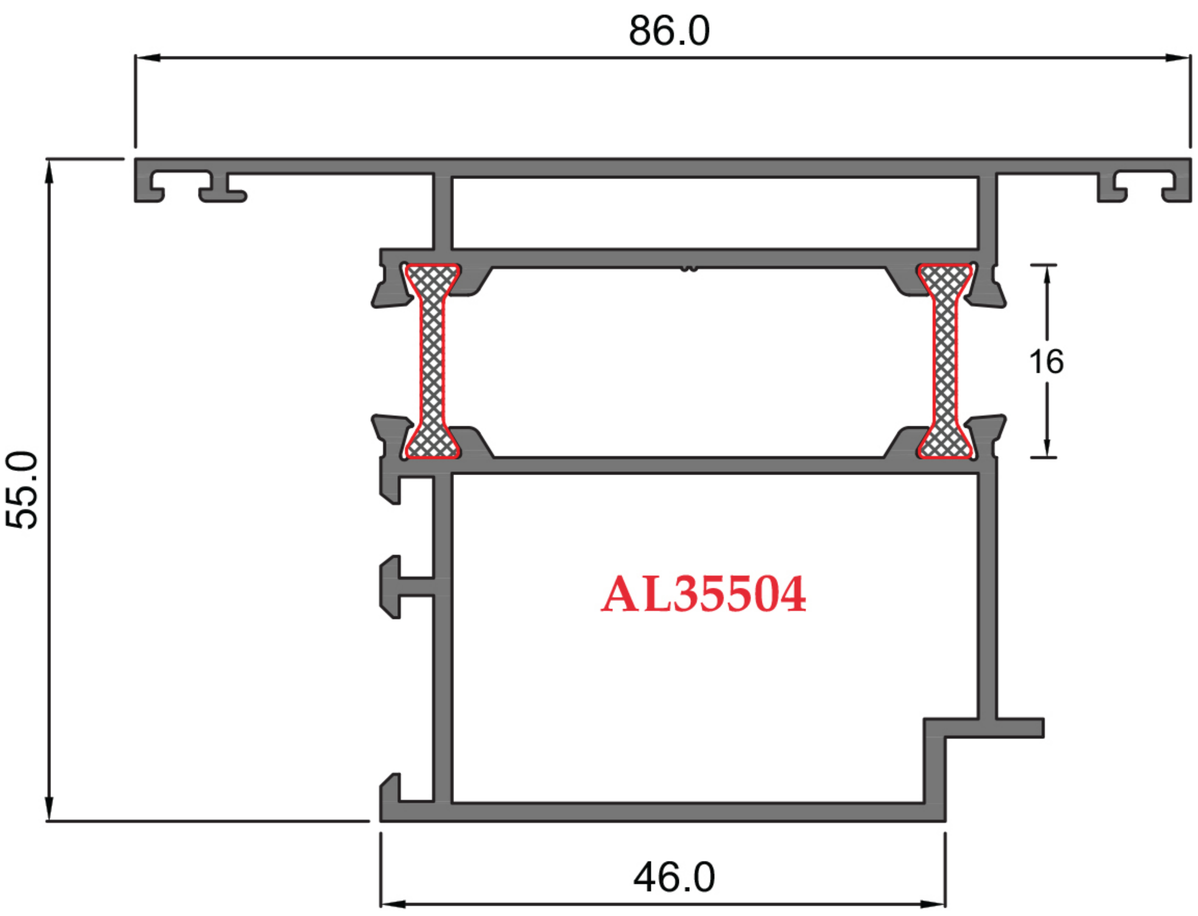
86.0
16
55.0
AL35504
46.0

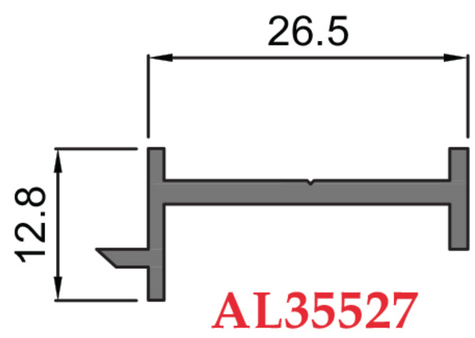
26.5
12.8
AL35527

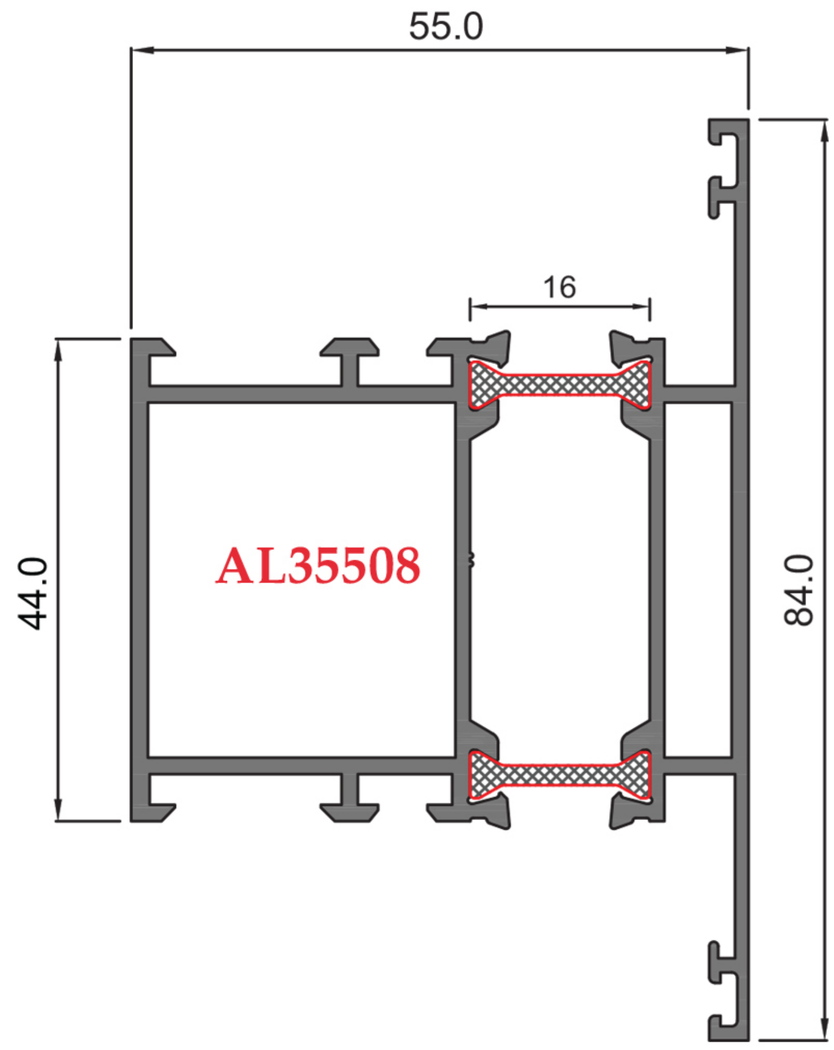
55.0
16
44.0
AL35508
84.0

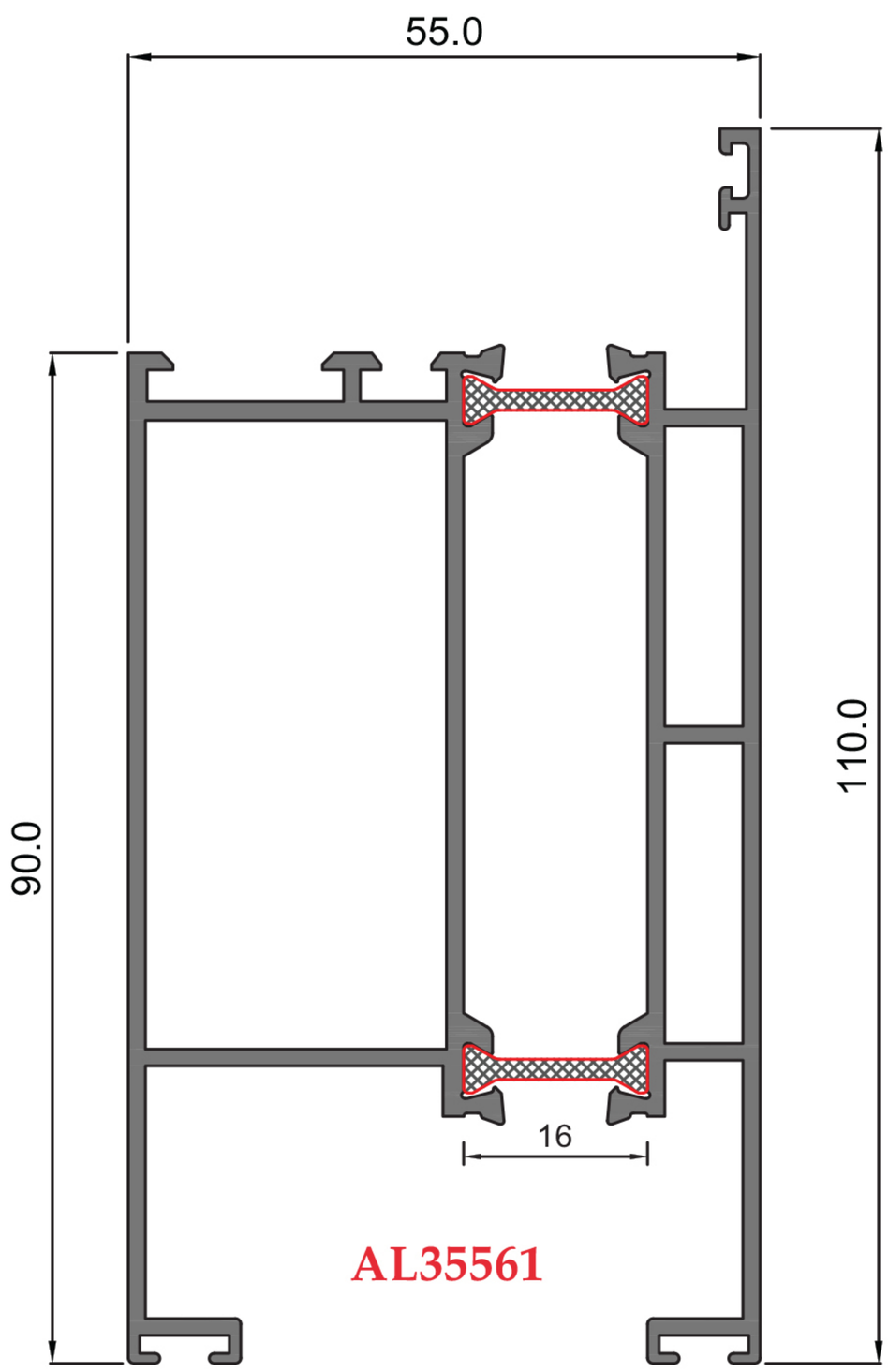
55.0
110.0
90.0
16
AL35561

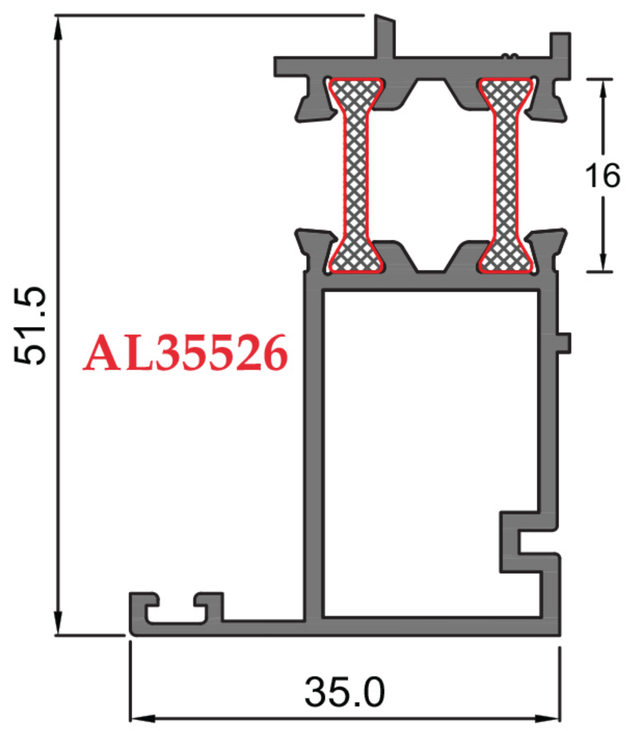
16
51.5
AL35526
35.0

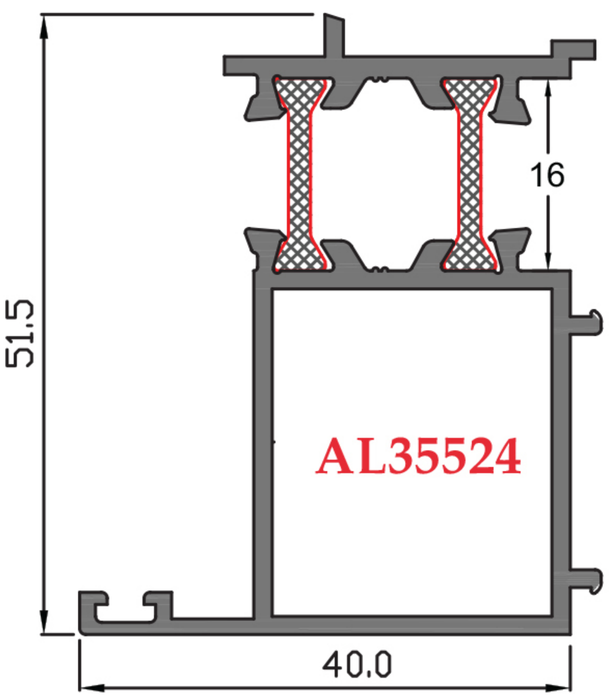
16
51.5
AL35524
40.0

FLAT BAR

A (MM)	B (MM)	WEIGHT (KG/M)
12	3	0.098
12.5	6	0.203
15	8	0.324
16	3	0.13
16	9.5	0.41
16.5	3	0.134
18	12	0.583
18.7	16.2	0.818
19	2	0.103
19	3	0.154
19	6	0.308
20	2	0.11
20	3	0.162
20	4	0.216
20	5	0.27
20	9	0.486
20	10	0.54
23.5	12	0.761
25	1.5	0.101
25	2	0.135
25	3	0.203
25	4	0.27
25	5	0.338
25	6	0.405
25	8	0.54
25	10	0.675
25	12	0.81
25	15	1.013
27	4	0.292
27.3	12	0.885
30	2	0.162
30	3	0.243
30	4	0.324
30	5	0.405
30	10	0.81
30	15	1.215
30	20	1.62
32	2	0.173
32	4	0.346
32	5	0.432

FLAT BAR

A (MM)	B (MM)	WEIGHT (KG/M)
38	2	0.205
38	3	0.308
38	4	0.411
38	5	0.513
38	6	0.616
40	2	0.216
40	2.85	0.308
40	3	0.324
40	4	0.432
40	5	0.54
40	6	0.648
40	8	0.864
40	10	1.08
40	12	1.296
40	20	2.16
40	30	3.24
43	12	1.393
44	3	0.356
45	35	4.25
46	3.6	0.447
46	6	0.745
50	2	0.27
50	3	0.405
50	4	0.54
50	4.85	0.655
50	5	0.675
50	5.85	0.79
50	6	0.81
50	8	1.08
50	10	1.35
50	12	1.62
50	20	2.7
50	30	4.05
60	3	0.486
60	4	0.648
60	5	0.81
60	6	0.972
60	8	1.296
60	12	1.944

FLAT BAR

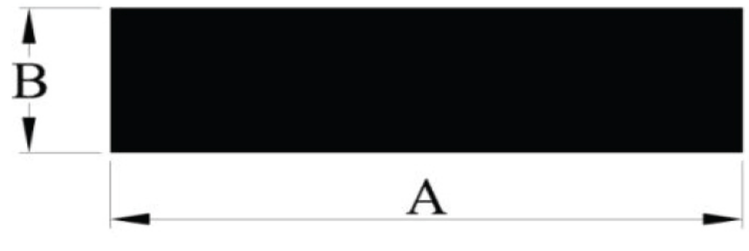

A (MM)	B (MM)	WEIGHT (KG/M)
60	20	3.24
60	30	4.86
63.5	3	0.515
63.5	5	0.858
65	5	0.878
65	15	2.633
70	5	0.945
70	10	1.89
75	3	0.608
75	5	1.013
75	6	1.215
75	10	2.025
76.4	0.9	0.186
80	6	1.296
80	8	1.728
80	30	6.48
84	10	2.268
90	3	0.729
90	5	1.215
90	11	2.673
100	3	0.81
100	4	1.08
100	5	1.35
100	6	1.62
100	8	2.16
100	10	2.7
100	12	3.24
100	16	4.32
100	20	5.4
104	8	2.246
120	8	2.592
120	10	3.24
120	25	8.1
125	25	8.438
140	12	4.536
148	13	5.195
150	2.5	1.013
150	5	2.025
150	6	2.43
150	8	3.24

FLAT BAR

A (MM)	B (MM)	WEIGHT (KG/M)
150	10	4.05
150	12	4.86
150	15	6.075
160	8	3.456
177	5	2.39
200	5	2.7
200	8	4.32
200	10	5.4
200	12	6.48
200	15	8.1
222	8	4.795
250	2.5	1.755
250	10.2	6.885
285	6	4.617
300	6	4.86
300	10	8.1
300	12	9.72
320	15.3	13.219
417	13	14.637
420	12	13.608
427	8	9.223
486	8	10.498

SQUARE BAR

SECTION NO.	A (MM)	WEIGHT (KG/M)
70229	9.5	0.244
70233	10	0.27
70108	12	0.389
70230	13	0.456
70204	14.5	0.568
70262	15	0.608
70231	16	0.691
70246	18	0.875
70232	20	1.08
70241	25	1.688
70240	30	2.43
70235	32	2.765
70203	40	4.32
70261	50	6.75
70222	75	15.188

ROUND BAR

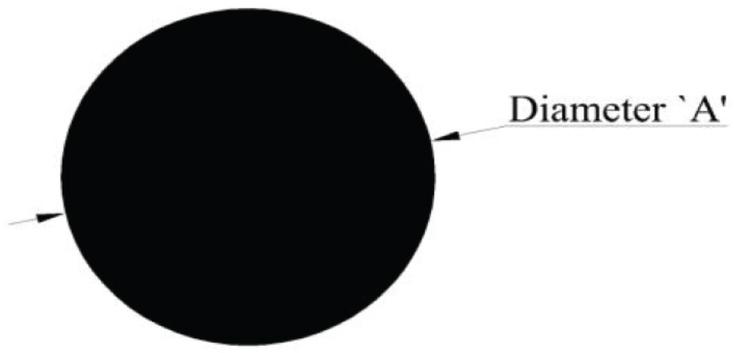

DIAMETER 'A' (MM)	WEIGHT (KG/M)
6	0.076
8	0.136
10	0.212
11	0.257
12	0.305
13	0.358
14	0.416
14.5	0.446
15	0.478
16	0.543
20	0.848
25	1.326
28	1.663
30	1.91
32	2.172
36	2.748
38	3.062
40	3.393
45	4.294
51	5.516
60	7.634

EQUAL ANGLES

A (MM)	THICKNESS 'T' (MM)	WEIGHT (KG/M)
12	2	0.12
12.7	1.59	0.102
15	1	0.078
15	1.5	0.115
15	2	0.151
19	2	0.194
20	0.65	0.069
20	1	0.105
20	1.1	0.115
20	1.4	0.146
20	1.5	0.156
20	1.85	0.191
20	2	0.206
20	2.5	0.253
20	3	0.3
25	0.65	0.087
25	1	0.132
25	1.3	0.171
25	1.5	0.196
25	1.85	0.241
25	2	0.26
25	2.5	0.321
25	2.85	0.363
25	3	0.381
25	5	0.608
25.4	3.18	0.409
28	2.5	0.361
30	0.65	0.104
30	0.85	0.136
30	1	0.16
30	1.2	0.191
30	1.5	0.237
30	1.85	0.291
30	2	0.313
30	2.5	0.389
30	2.8	0.432
30	3	0.462
30	4	0.605
30	5	0.743

EQUAL ANGLES

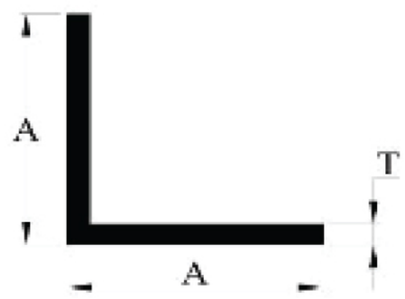

A (MM)	THICKNESS 'T' (MM)	WEIGHT (KG/M)
32	3	0.494
35	3	0.542
38	1.5	0.302
40	1	0.213
40	1.5	0.318
40	1.85	0.391
40	2	0.421
40	2.5	0.523
40	2.85	0.594
40	3	0.624
40	3.2	0.664
40	3.7	0.762
40	4	821
40	5	1.013
40	6.5	1.29
40	7.9	1.538
45	3	0.705
50	1.3	0.346
50	1.5	0.4
50	1.85	0.49
50	2	0.53
50	2.85	0.748
50	3	0.786
50	3.85	1
50	4	1.037
50	5	1.283
50	5.85	1.487
50	6	1.523
50	10	2.43
60	2.85	0.901
60	3	0.948
60	4.85	1.508
60	6	1.847
60	8	2.419
63.5	3	1.005
63.5	5	1.647
75	2.85	1.132
75	3	1.191
75	4	1.577

EQUAL ANGLES

A (MM)	THICKNESS 'T' (MM)	WEIGHT (KG/M)
75	5	1.958
75	8	3.067
75	9.5	3.603
80	6	2.495
80	8	3.283
90	4	1.901
100	3	1.596
100	4.8	2.53
100	6	3.143
100	10	5.13

UNEQUAL ANGLES

A (MM)	B (MM)	THICKNESS 'T' (MM)	WEIGHT (KG/M)
15	10	1.5	0.095
16	14	3	0.219
18	8	1.1	0.074
20	15	2	0.179
20	17	2	0.189
25	15	2	0.206
25	17	2	0.216
25	20	2	0.232
30	15	3	0.34
30	18	2	0.249
30	20	1.5	0.196
30	20	1.8	0.234
30	25	2	0.286
30	25	4	0.551
33.5	12.5	5	0.554
33.5	19	5	0.641
35	20	2	0.286
36	30	1.5	0.261
38	24	3	0.478
40	11	2	0.264
40	20	2	0.313
40	20	3	0.461
40	35	3	0.583
40	35	3.5	0.676
50	10	1.2	0.189
50	15	2	0.34
50	20	1.9	0.349
50	20	2	0.367
50	25	2	0.394
50	25	2.3	0.452
50	25	2.5	0.49
50	28	1	0.208
50	28	1.25	0.26
50	30	3	0.624
50	30	4	0.821

UNEQUAL ANGLES

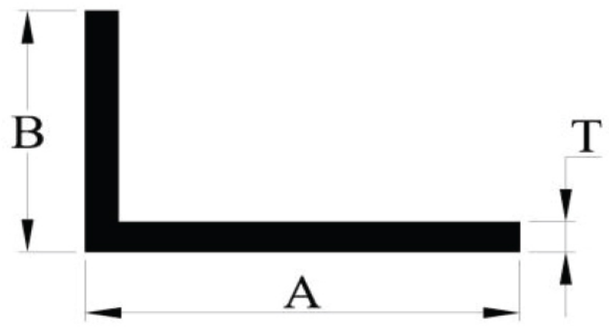

A (MM)	B (MM)	THICKNESS 'T' (MM)	WEIGHT (KG/M)
50	40	3	0.705
50	40	4	0.929
50	40	5	1.148
55	30	1.5	0.34
60	30	1.5	0.358
60	30	3	0.705
60	40	4	1.037
70	25	1.5	0.379
70	25	2	0.502
70	30	2	0.529
75	12	1.5	0.346
75	50	1.5	0.5
75	50	2	0.664
75	50	3	0.988
75	50	4	1.307
75	50	4	1.307
75	50	5	1.62
76	50	6	1.944
80	40	4	1.253
80	50	2.8	0.962
80	50	8	2.635
85.01	27.5	6	1.728
90	30	5	1.552
94	72	6	2.592
100	25	3	0.988
100	40	4	1.469
100	50	3	1.191
100	50	4	1.577
100	50	5	1.957
100	50	6	2.333
100	67.5	3	1.332
100	80	8	3.715
105	25	2.5	0.861
110	50	4	1.685
120	70	6	2.981
150	50	3	1.601

UNEQUAL ANGLES

A (MM)	B (MM)	THICKNESS 'T' (MM)	WEIGHT (KG/M)
150	50	4	2.117
150	75	3	1.798
150	100	5	3.308
160	60	4	2.333
200	50	4	2.657
200	50	6	3.953
200	130	10	8.64

T-SECTIONS

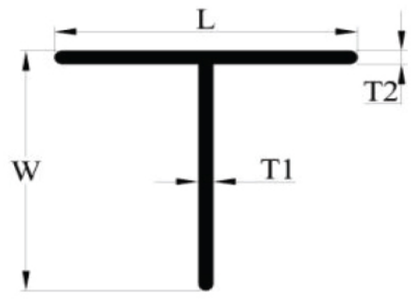

T-RAILING				
L (MM)	W (MM)	T1 (MM)	T2 (MM)	WEIGHT (KG/M)
16	8	3.1	1.3	0.112
19	14	3.1	1.5	0.182
25	16	3.1	2	0.252

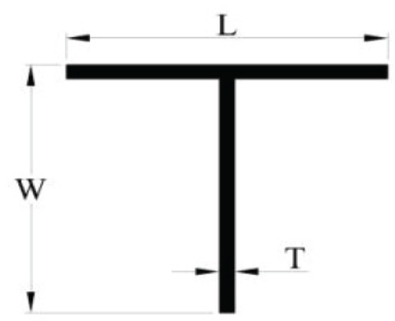

T-PLAIN			
L (MM)	W (MM)	T (MM)	WEIGHT (KG/M)
6	20	1.1	0.074
18	12.5	5	0.344
20	50	3	0.543
21.5	15	1.5	0.142
25	25	1	0.133
25	25	1.8	0.235
35	8	1.4	0.157
35	11.3	1.3	0.157
38	38	2.4	0.477
40	52	2	0.486
50	7.1	4	0.573
50	50	4	1.037
65	47	2	0.594
80	50	5	1.688
80	52	2	0.702
85	160	4	2.603
90	50	5	1.823
100	75	4	1.858
100	100	3	1.625
120	50	2	0.907
120	70	4	2.009

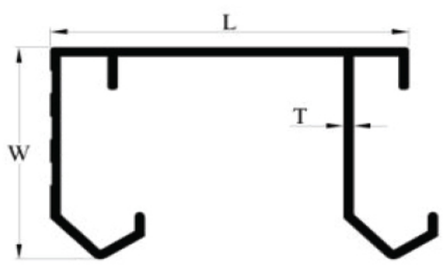

TWO J-RAILING			
L (MM)	W (MM)	T (MM)	WEIGHT (KG/M)
57.5	35	1.5	0.637

U-CHANNELS

A (MM)	B (MM)	THICKNESS 'T (MM)	WEIGHT (KG/M)
8	8	2	0.108
8	14	1	0.092
8	15	1.5	0.142
8.6	10	1.2	0.084
9	8	1	0.062
10	10	1.5	0.11
10	20	1.2	0.154
10	25	2	0.302
12	12	1.5	0.134
12	20	1.5	0.198
12	30	1.2	0.226
14	15	1.5	0.166
14.6	18	1.3	0.167
15	6	1.5	0.097
15	8	1.5	0.113
15	10	1.5	0.13
15	11	1.2	0.122
15	15	1	0.116
15	15	1.25	0.143
15	15	2	0.221
15	18	1.2	0.157
15	18	1.3	0.17
15	30	1.5	0.292
16	16	1.25	0.154
16	19	1.2	0.167
16.5	19.5	1.2	0.172
16.8	25.1	1.8	0.308
17	17	1.5	0.194
17.5	18.3	1.5	0.207
18	15	1.2	0.148
18	40	1.5	0.385
18.5	18.5	1	0.145
19	30	2	0.405
19.5	16.5	1.5	0.2
20	10	1.4	0.141
20	10	1.6	0.16

U-CHANNELS

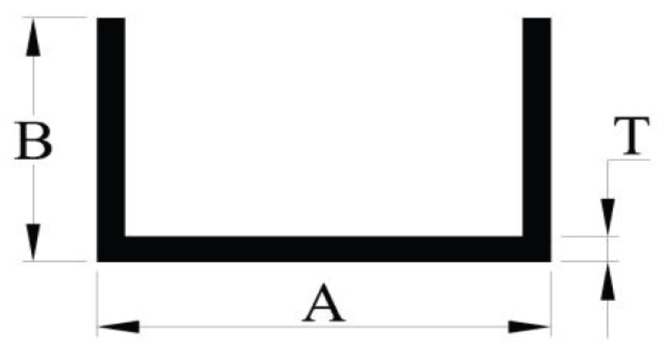

A (MM)	B (MM)	THICKNESS 'T (MM)	WEIGHT (KG/M)
20	15	1	0.13
20	15	1.5	0.19
20	20	1.5	0.231
20	20	2	0.302
20	30	2	0.41
20	30	3.25	0.645
22	19	1.25	0.194
23	40	1.5	0.405
24	150	2	1.725
25	8	1.5	0.154
25	12	2	0.243
25	15	1.5	0.211
25	25	2	0.383
25	50	2	0.649
25.5	4.2	1.1	0.0941
30	15	1.5	0.231
30	15	2.2	0.331
30	20	1.5	0.271
30	30	1.9	0.442
30	30	3	0.681
30	30	6	1.264
30	100	2.5	1.519
30	100	2.8	1.696
31.5	17	2	0.332
32	25	3	0.616
32	32	6	1.361
33	29	2.3	0.535
34	20	1.5	0.286
35	30	5	1.148
37	15	1.5	0.259
37	18	2	0.373
38	25	3	0.665
40	20	1	0.211
40	20	1.2	0.251
40	20	1.3	0.273
40	20	1.8	0.371

U-CHANNELS

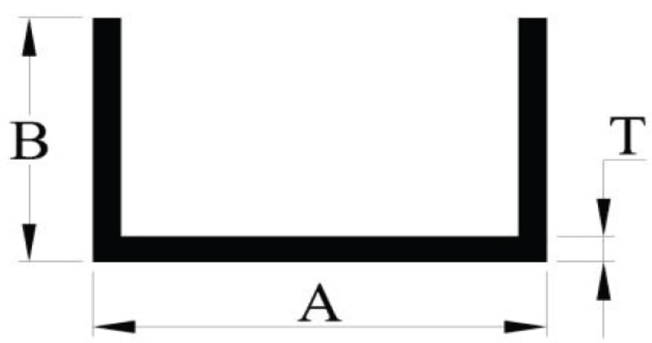

A (MM)	B (MM)	THICKNESS 'T (MM)	WEIGHT (KG/M)
40	20	2	0.411
40	40	2.5	0.776
40	120	4	2.938
43	24	5	1.093
44	9.5	3	0.462
44	46	3.18	1.113
45	20	1.2	0.268
45	20	1.5	0.332
45	25	2	0.491
45	25	3	0.721
45	37	2	0.621
49.5	105	10	6.467
50	18	2	0.443
50	20	2	0.462
50	25	2	0.518
50	48	3	1.134
52	20	2.5	0.587
55	20	1.8	0.444
56	200	3	3.645
57	198.5	10	11.718
60	10.5	2.6	0.532
63	60	5	2.335
66	30	3	0.972
70	40	4	1.534
75	40	2.5	1.013
75	40	5	1.958
78.8	18.8	4.3	1.252
80	10	5	1.215
80	40	2	0.842
80	40	8	3.11
83.82	4.78	1.57	0.384
85	122	20	15.606
87	10.5	2.6	0.721
92	7	1.5	0.417
100	25	1.6	0.635
100	25	2	0.789

U-CHANNELS

A (MM)	B (MM)	THICKNESS 'T (MM)	WEIGHT (KG/M)
100	25	3.5	1.351
100	30	1.5	0.636
100	30	2.5	1.047
100	37	2	0.918
100	40	1.65	0.787
100	40	2	0.95
100	50	1.5	0.798
100	50	2	1.058
100	50	4.85	2.492
100	50	8	3.974
102	50	3	1.588
112	66	6	3.758
124	10.5	2.6	0.981
125	65	8	5.162
125	85	20	13.77
127	50	6	3.483
133	13	2	0.837
143	50	6	3.742
150	40	2	1.221
150	40	3	1.811
153	49	2	1.333
165	30	2.2	1.31
200	140	3	3.839
208	50	2.2	1.802
215	30	2.2	1.607
250	35	5	4.185
300	50	3	3.192
304	50	3	3.223

I-BEAMS

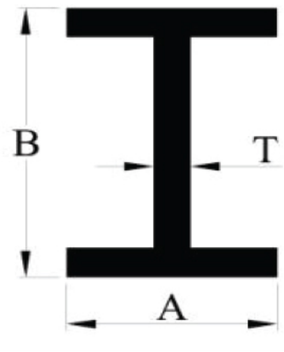

A (MM)	B (MM)	THICKNESS 'T' (MM)	WEIGHT (KG/M)
15.2	6.4	1.1	0.103
15.2	6.4	1.2	0.112
26	8	2	0.205
50	25	3	0.964
50	50	3	1.166
50	50	5	1.891
75	50	3	1.571
100	50	3	1.976
100	100	5	3.916

ROUND TUBE

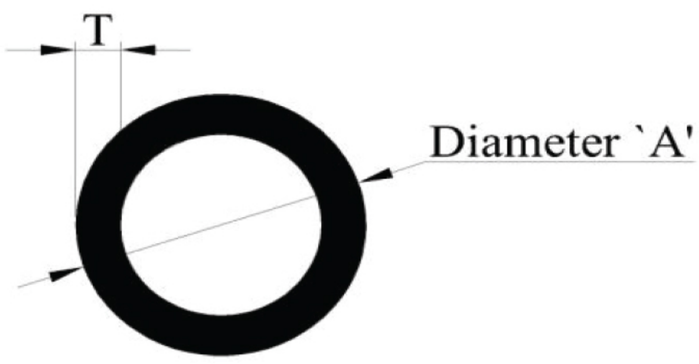

DIAMETER 'A' (MM)	THICKNESS 'T' (MM)	WEIGHT (KG/M)
7.8	1	0.058
8	1	0.059
8	1.15	0.066
8	1.5	0.083
10	3	0.178
12	1.2	0.11
12	1.5	0.134
13.8	1.5	0.156
14	1.5	0.159
14.5	1	0.115
16	2	0.238
16	3	0.331
17	1	0.136
17	3	0.356
18	0.8	0.117
18	1.5	0.21
19	3	0.407
19	4	0.509
20	2	0.306
21	3	0.458
22	3	0.484
25	1	0.204
25	1.5	0.299
25	1.85	0.364
25	2	0.39
25	2.8	0.527
25	3	0.56
25	3.2	0.592
25	3.5	0.638
25	4	0.713
25	5	0.848
25	6	0.967
25	6.4	1.01
26.2	6	1.028
28	3.25	0.682
30	2	0.475
30	2.8	0.646
30	3	0.687

ROUND TUBE

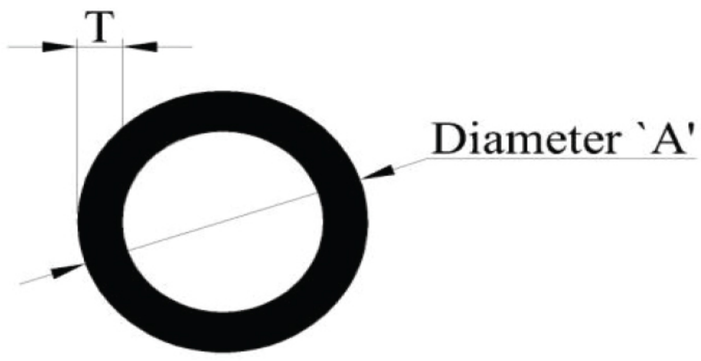

DIAMETER 'A' (MM)	THICKNESS 'T' (MM)	WEIGHT (KG/M)
32	1.2	0.314
32	2	0.509
32	3	0.738
32.2	6	1.333
33.5	4	1.001
33.5	9.65	1.952
38	2	0.611
38	3.8	1.102
38	7.5	1.94
40	2	0.645
40	2.5	0.795
40	3	0.942
40	3.8	1.167
40	4	1.221
40	5	1.484
42.2	8.1	2.342
42.5	6	1.86
43	4	1.389
44	4.8	1.596
45	4.8	1.637
45	5	1.697
45.5	6	2.015
48	3.8	1.425
48	4	1.493
48.3	4.5	1.672
50	1.9	0.775
50	2	0.815
50	2.5	1.008
50	2.9	1.158
50	3	1.196
50	3.8	1.49
50	4	1.561
50	5	1.908
50.8	1.63	0.68
51	6	2.29
51.4	2.3	0.958
52	2	0.848
57	6	2.596

ROUND TUBE

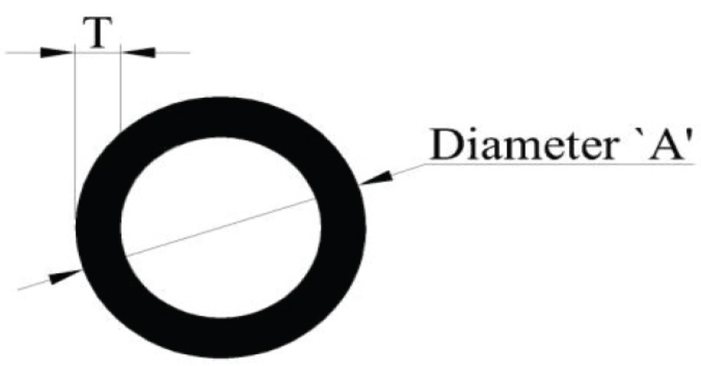

DIAMETER 'A' (MM)	THICKNESS 'T' (MM)	WEIGHT (KG/M)
60	1.1	0.55
60	1.5	0.744
60	1.85	0.913
60	2	0.984
60	2.8	1.359
60	3	1.451
60	3.8	1.812
60	4	1.9
60	5	2.333
60.4	4.8	2.264
60.4	10.4	4.412
64	6.5	3.17
69	2	1.137
69	5	2.715
75	2	1.239
75	3	1.833
75	4	2.409
76	2.5	1.559
76	3.85	2.356
76	4	2.443
76	5.8	3.454
76.2	2.9	1.804
76.2	3.25	2.011
76.2	4.75	2.879
77.3	2	1.277
80	1.9	1.259
80	3	1.96
80	4	2.579
80	10	5.938
87.2	12.7	8.026
88.5	2.5	1.824
88.9	12.7	8.209
89	5	3.563
89	6	4.225
90	2.5	1.855
90	5	3.605
100	2	1.665
100	3	2.468

ROUND TUBE

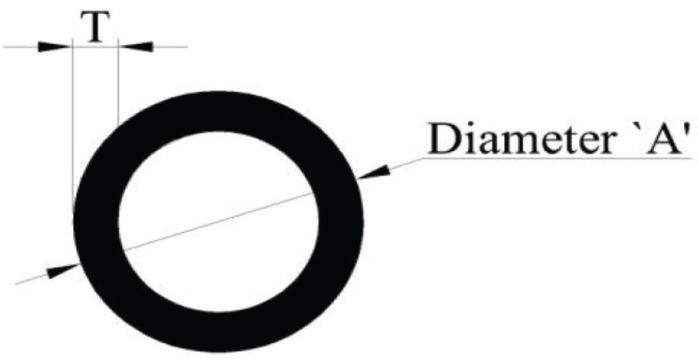

DIAMETER 'A' (MM)	THICKNESS 'T' (MM)	WEIGHT (KG/M)
100	4	3.258
100	5	4.03
100	6.5	5.157
100	10	7.635
101.5	2.5	2.099
120	2.8	2.784
120	5	4.88
120	10	9.331
127	3	3.155
145	12.5	14.048
150	3	3.741
150	5	6.15
158	2.75	3.621
158	3	3.944
165	3	4.122
180	5	7.422
200	4	6.65
250	3	6.285

SQUARE TUBE

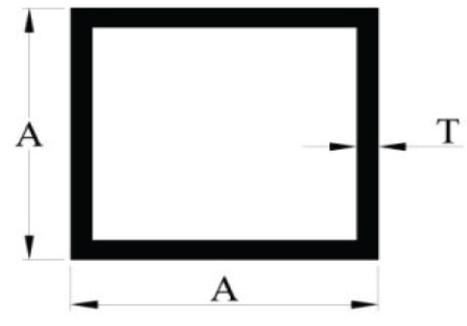

A (MM)	THICKNESS 'T' (MM)	WEIGHT (KG/M)
12	1.2	0.14
12.6	1.2	0.147
15	2	0.281
16	3	0.421
19.5	2	0.378
20	0.9	0.186
20	1	0.205
20	1.3	0.263
20	1.4	0.281
20	1.5	0.3
20	1.75	0.345
20	1.9	0.372
20	2	0.389
20	2.5	0.473
20	3	0.551
25	1.5	0.381
25	1.65	0.417
25	1.8	0.451
25	2	0.5
25	2	0.482
25	2.8	0.671
25	3	0.713
30	0.9	0.283
30	1	0.313
30	1.5	0.462
30	1.8	0.548
30	2	0.605
30	2.8	0.823
30	3	0.875
35	1.5	0.542
38	2	0.778
40	0.7	0.297
40	0.75	0.318
40	0.9	0.38
40	1	0.422
40	1.4	0.584

SQUARE TUBE

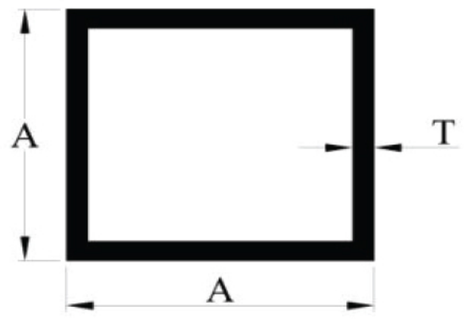

A (MM)	THICKNESS 'T' (MM)	WEIGHT (KG/M)
40	1.5	0.624
40	1.8	0.745
40	2	0.821
40	2.8	1.125
40	3	1.2
40	3.8	1.486
40	4	1.556
45	1.5	0.705
45	2	0.929
45	2.5	1.148
45	3	1.361
50	1	0.529
50	1.2	0.632
50	1.4	0.735
50	1.5	0.786
50	1.85	0.962
50	2	1.037
50	2.5	1.283
50	2.7	1.379
50	2.8	1.427
50	3	1.523
50	3.8	1.896
50	4	1.987
50	5	2.43
50	5.5	2.643
52	5	2.538
60	2	1.252
60	2.35	1.463
60	3	1.847
60	4	2.42
65	2.5	1.678
70	2	1.47
75	2	1.577
75	2.5	1.958
75	2.8	2.183
76	5	3.834

SQUARE TUBE

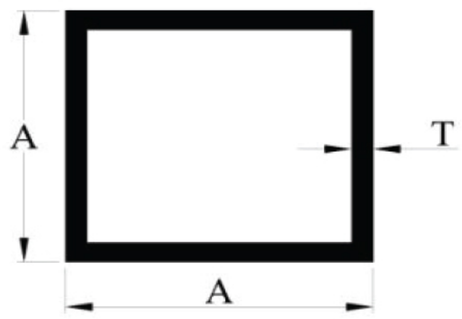

A (MM)	THICKNESS 'T' (MM)	WEIGHT (KG/M)
80	1.3	1.105
80	2	1.684
80	3	2.495
80	6	4.795
100	1.8	1.909
100	2	2.117
100	2.5	2.633
100	2.8	2.939
100	3	3.143
100	4.8	4.935
100	10	9.72
101.6	6.35	6.532
103	12.5	12.22
120	2.4	3.048
140	2.5	3.713
150	3	4.763
150	5	7.83
180	3	5.735
200	3	6.383
200	4	8.467

RECTANGULAR TUBE

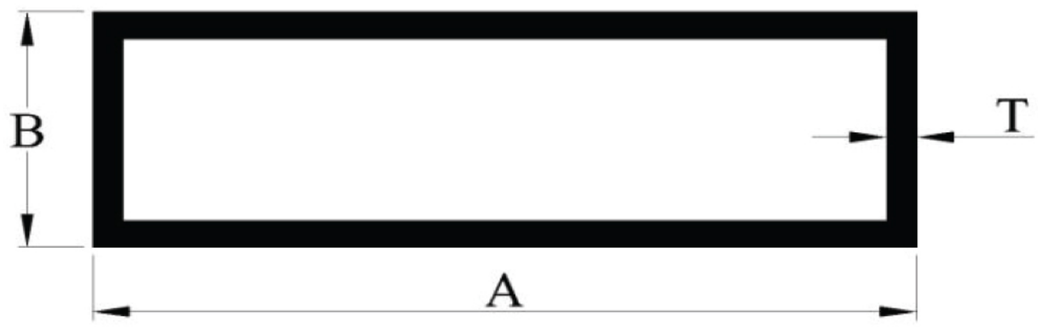

A (MM)	B (MM)	THICKNESS 'T' (MM)	WEIGHT (KG/M)
13	10	1.5	0.162
20	10	1.5	0.218
21	11	0.8	0.131
25	15	2	0.389
25	20	2	0.443
28	15	2	0.421
30	20	2	0.497
30	25	1.5	0.421
36.3	15	1.5	0.391
39	15	1.6	0.439
40	10	1	0.259
40	15	1.5	0.421
40	20	0.75	0.237
40	20	0.85	0.268
40	20	0.9	0.283
40	20	1	0.313
40	20	1.2	0.373
40	20	1.3	0.413
40	20	1.5	0.462
40	20	1.8	0.55
40	20	2	0.605
40	20	2.5	0.743
40	20	2.8	0.823
40	20	3	0.875
40	25	2	0.659
40	26	3.2	1.03
40	30	2	0.713
40	30	3	1.037
45	15	1.6	0.49
45	25	1	0.367
50	15	1	0.34
50	20	1.2	0.438
50	20	1.8	0.645
50	24	2	0.756
50	25	1	0.394
50	25	1.2	0.47

RECTANGULAR TUBE

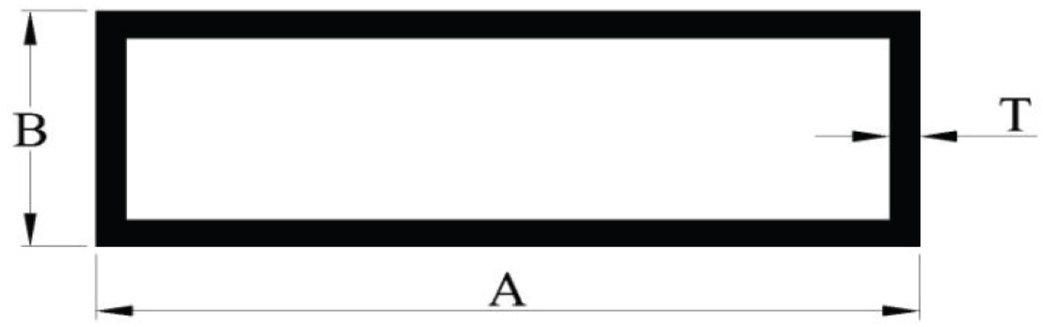

A (MM)	B (MM)	THICKNESS 'T' (MM)	WEIGHT (KG/M)
50	25	1.8	0.694
50	25	2	0.767
50	25	2.5	0.945
50	25	3	1.118
50	25	4	1.447
50	30	1.5	0.624
50	30	2	0.821
50	30	3	1.199
50	35	3	1.28
50	40	2	0.928
50	40	3	1.361
52	20	2	0.734
54.4	32.5	3	1.31
55	35	3	1.361
60	20	1.5	0.624
60	20	2	0.821
60	30	1	0.475
60	30	1.4	0.66
60	30	1.8	0.84
60	30	2	0.929
60	30	3	1.361
60	40	2	1.037
63	24	2	0.9
63	37	2.5	1.283
63.5	38.1	0.95	0.511
65	25	3	1.36
65	50	3	1.77
68	16	1.1	0.486
70	25	1.4	0.697
70	25	3	1.442
70	40	3	1.685
70	40	4	2.203
70	50	2	1.253
75	20	1.7	0.841
75	25	1	0.529
75	25	2.5	1.283

RECTANGULAR TUBE

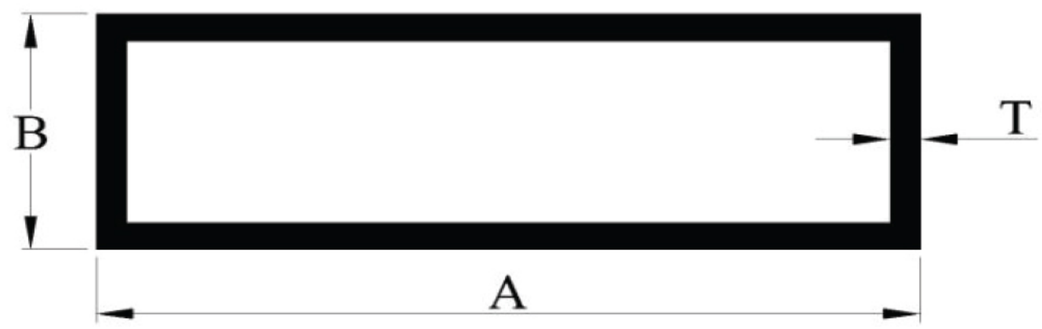

A (MM)	B (MM)	THICKNESS 'T' (MM)	WEIGHT (KG/M)
75	35	1	0.583
75	35	3	1.609
75	35	3	1.685
75	50	3	1.93
78	38	0.8	0.494
78	38	1.1	0.676
80	15	0.75	0.379
80	15	0.85	0.428
80	15	0.9	0.453
80	20	0.7	0.373
80	20	0.9	0.477
80	20	1.2	0.632
80	20	2	1.037
80	25	2	1.09
80	40	0.75	0.48
80	40	0.9	0.574
80	40	1.1	0.7
80	40	1.4	0.886
80	40	1.5	0.948
80	40	1.8	1.131
80	40	2	1.252
80	40	2.5	1.552
80	40	2.8	1.73
80	40	3	1.848
80	40	4	2.419
80	40	4.5	2.697
80	50	2	1.361
80	50	3	2.01
80	50	4	2.635
90	25	2	1.199
90	50	1.2	0.891
90	50	1.6	1.182
95	35	1	0.691
98	40	2	1.447
100	15	0.75	0.46
100	15	0.9	0.55

RECTANGULAR TUBE

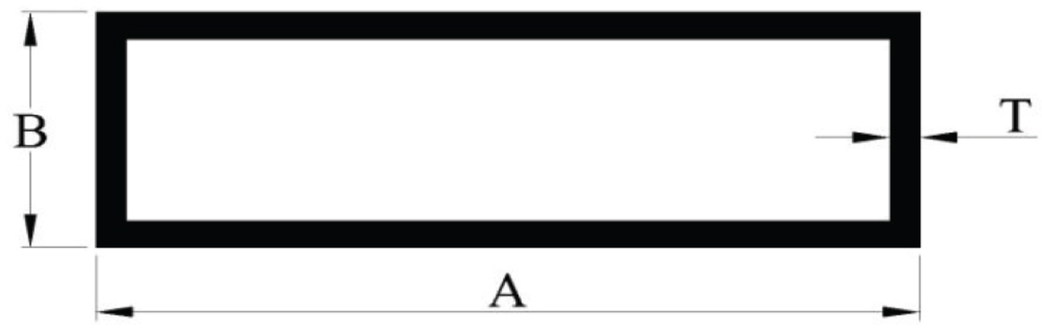

A (MM)	B (MM)	THICKNESS 'T' (MM)	WEIGHT (KG/M)
100	15	1.35	0.819
100	20	0.7	0.448
100	20	0.9	0.574
100	20	1.1	0.7
100	20	1.4	0.887
100	20	1.6	1.009
100	20	1.8	1.131
100	20	2	1.253
100	20	3	1.847
100	25	2	1.307
100	25	4	2.527
100	30	1.2	0.827
100	30	2	1.361
100	30	2.5	1.688
100	30	5	3.24
100	40	1	0.745
100	40	1.1	0.818
100	40	1.2	0.892
100	40	1.4	1.04
100	40	1.8	1.326
100	40	2	1.468
100	40	3	2.171
100	45	2	1.523
100	45	3	2.252
100	50	0.9	0.72
100	50	1	0.799
100	50	1.1	0.878
100	50	1.2	0.957
100	50	1.4	1.113
100	50	1.5	1.191
100	50	1.6	1.269
100	50	1.85	1.462
100	50	2	1.577
100	50	2.35	1.85
100	50	2.5	1.96
100	50	2.8	2.183

RECTANGULAR TUBE

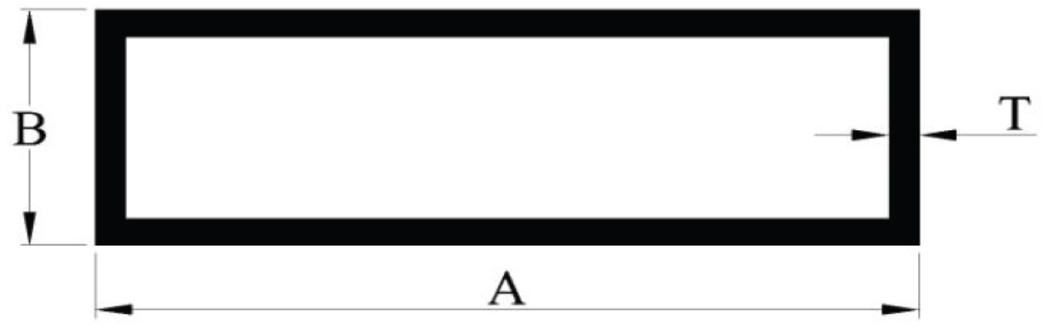

A (MM)	B (MM)	THICKNESS 'T' (MM)	WEIGHT (KG/M)
100	50	3	2.333
100	50	3.3	2.555
100	50	3.45	2.666
100	50	3.5	2.703
100	50	4	3.067
100	50	4.8	3.64
100	50	5	3.78
100	50	8	5.789
100	60	3	2.495
100	60	3.8	3.127
100	60	4	3.283
100	75	3	2.738
100	80	2.5	2.363
100	80	3.8	3.54
115	25	1.5	1.11
120	20	3	2.171
120	25	1.5	1.15
120	40	1.6	1.355
120	40	2	1.684
120	40	4	3.283
120	50	1.5	1.353
120	50	3	2.657
120	50	3.8	3.332
120	60	1.6	1.528
120	60	3	2.819
120	60	4	3.715
125	20	2	1.523
127.6	49	2.2	2.046
130	15	2	1.523
140	40	2	1.901
140	50	2	2.009
140	70	30	3.305
150	20	1.6	1.441
150	20	2	1.793
150	25	4	3.607
150	35	1.8	1.763

RECTANGULAR TUBE

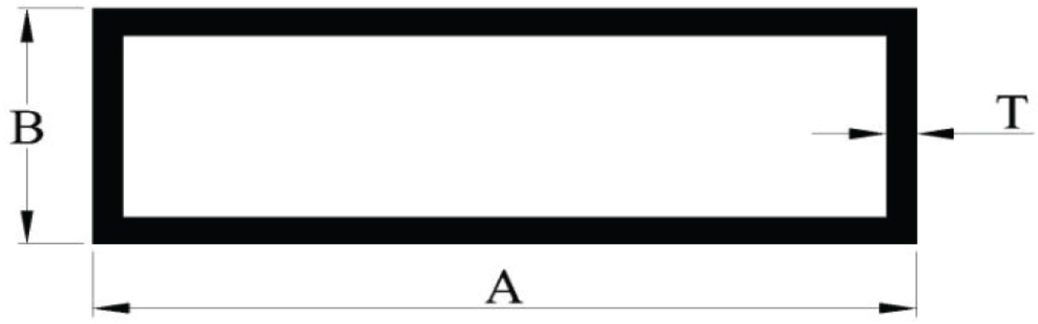

A (MM)	B (MM)	THICKNESS 'T' (MM)	WEIGHT (KG/M)
150	50	2	2.117
150	50	2.4	2.53
150	50	3	3.143
150	50	4	4.147
150	50	5	5.13
150	60	4	4.363
150	60	8	8.381
150	75	2	2.387
150	75	2.5	2.97
150	75	3	3.548
150	75	5	5.805
150	80	2	2.441
150	80	2.5	3.038
150	85	4	4.903
150	85	10	11.61
150	100	2	2.657
150	100	2.4	3.178
150	100	3	3.953
150	100	4	5.227
150	100	5	6.48
150	100	6	7.711
160	80	2	2.549
180	50	3	3.629
180	100	10	14.04
183.5	53.5	4.5	5.54
200	20	2	2.333
200	25	4	4.687
200	33	2	2.473
200	40	4	5.02
200	50	1.6	2.132
200	50	1.8	2.395
200	50	2	2.657
200	50	2.2	2.918
200	50	3	3.953
200	60	3	4.115
200	70	3	4.277

RECTANGULAR TUBE

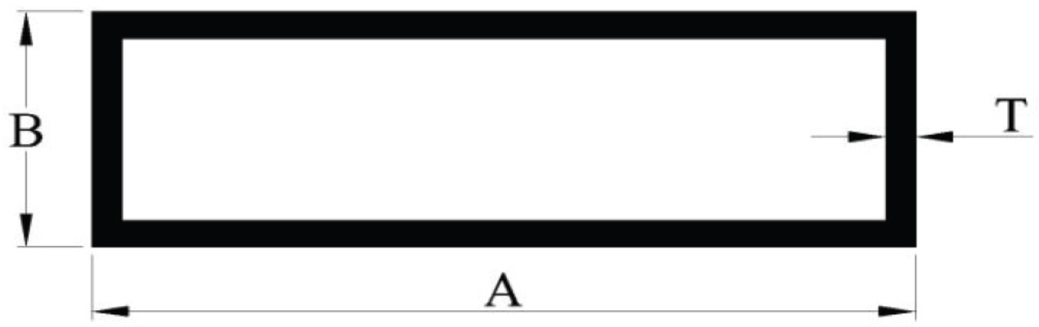

A (MM)	B (MM)	THICKNESS 'T' (MM)	WEIGHT (KG/M)
200	70	6	8.368
200	80	3	4.439
200	100	2.5	3.983
200	100	3	4.763
200	100	4	6.307
200	100	6	9.331
200	150	3	5.573
203.2	50.8	3	4.018
220	50	1.6	2.305
220	50	1.8	2.589
220	50	2	2.873
230	140	3	5.897
240	50	1.8	2.784
240	50	2	3.089
250	50	2.8	4.451
250	75	3	5.168
250	100	3	5.573
275	125	10	20.52
300	50	3	5.573
300	80	3	6.056
300	100	3	6.383
300	100	6	12.571
300	150	3	7.193
340	90	3.5	7.995